Product Specification

400GBASE-SR4 OSFP Flat Top PAM4 850nm 50m DOM MTP/MPO-12 APC MMF InfiniBand NDR Optical Transceiver Module

PN: OSFP-NDR-SR4



Features

- Hot-pluggable OSFP Flat Top form factor
- Aggregate data rate of 425Gb/s
- 4 × 106.25Gb/s PAM4 host electrical lanes
- 4 × 106.25Gb/s PAM4 optical lanes
- Single +3.3V power supply
- MTP/MPO-12 APC connector
- Maximum power consumption ≤10.0W
- Up to 30m over OM3 multimode fiber
- Up to 50m over OM4 multimode fiber
- 4-channel 850nm VCSEL array
- 4-channel PIN receiver array
- Built-in digital diagnostic monitoring
- Supports 400Gb/s InfiniBand NDR applications
- Commercial case temperature range of 0°C to 70°C

Compliance

- OSFP MSA
- IEEE 802.3ck (400GAUI-4 electrical interface)
- CMIS Rev. 5.0
- RoHS
- InfiniBand Certified

Applications

- 400Gb/s InfiniBand NDR links
- InfiniBand NDR switch-to-switch interconnects
- InfiniBand NDR switch-to-adapter interconnects
- AI and HPC cluster interconnects
- High-density GPU cluster fabrics
- High-density server-to-switch links

Description

The OSFP-NDR-SR4 is a hot-pluggable OSFP Flat Top optical transceiver designed for short-reach 400Gb/s InfiniBand NDR interconnects over multimode fiber. It uses four independent PAM4 host electrical lanes operating at 53.125 GBd per lane, corresponding to 106.25Gb/s per lane and an aggregate signaling rate of 425Gb/s. The module supports transmission distances of up to 30 meters over OM3 multimode fiber and 50 meters over OM4 multimode fiber through an MTP/MPO-12 APC optical interface.

The optical transmitter uses a four-channel 850nm VCSEL array, while the receiver incorporates a four-channel PIN photodiode array. Eight active fibers within the MTP/MPO-12 interface provide four transmit and four receive optical lanes. The module uses parallel optics without wavelength multiplexing or demultiplexing, providing a compact solution for high-bandwidth InfiniBand NDR network connections.

The module operates from a single +3.3V power supply with a maximum power consumption of 10.0W and supports a commercial case temperature range of 0°C to 70°C. Digital diagnostic monitoring and module control are provided through the two-wire management interface. The OSFP-NDR-SR4 is intended for InfiniBand NDR switch interconnects, AI and high-performance computing (HPC) clusters, and high-density GPU computing fabrics.

Product performance Specifications

1、Absolute Maximum Ratings

Parameter	Symbol	Min	Typ.	Max	Unit
Storage Temperature	TS	-40		+85	°C
Supply Voltage	VCC	-0.5		3.6	V
Relative Humidity	RH	5		85	%

2、Recommended Operating Conditions

Parameter	Symbol	Min	Typ.	Max	Unit
Operating Case Temperature	TC	0		70	°C
Power Supply Voltage	VCC	3.135	3.3	3.465	V
Power Supply Current	ICC			2.73	A
Power Consumption	PD			10.0	W
Aggregate Data Rate	DR		425		Gb/s
Host Electrical Lanes			4		lanes
Host Bit Rate per Lane			106.25		Gb/s
Host Signaling Rate per Lane			53.125 ±100ppm		GBd

Optical Lanes			4		lanes
Optical Bit Rate per Lane			106.25		Gb/s
Optical Signaling Rate per Lane			53.125 ±100ppm		GBd
Modulation Format			PAM4		
Link Distance on OM3 MMF		2		30	m
Link Distance on OM4 MMF		2		50	m
Pre-FEC Bit Error Ratio	BER			2.4×10^{-4}	

3、Host Electrical Interface

Parameter	Value
Electrical Lanes	4
Bit Rate per Lane	106.25Gb/s
Signaling Rate per Lane	53.125GBd ±100ppm
Modulation Format	PAM4
Host Interface	400GAUI-4

4、Transmitter Optical Characteristics — Per Lane

Parameter	Symbol	Min	Typ.	Max	Unit
Optical Signaling Rate			53.125 ±100ppm		GBd
Optical Bit Rate			106.25		Gb/s
Modulation Format			PAM4		
Wavelength Range[1]	λC	840	850	860	nm
RMS Spectral Width	ΔλRMS			0.6	nm
Average Launch Power	PAVG	-4.6		+4.0	dBm
Outer Optical Modulation Amplitude	OMAouter	-2.6		+3.5	dBm
Transmitter and Dispersion Eye Closure for PAM4	TDECQ			4.4	dB
Extinction Ratio[2]	ER	3.0			dB
Relative Intensity Noise	RIN21.4OMA			-132	dB/Hz
Optical Return Loss Tolerance	ORL			12	dB
Transmitter Reflectance	TR			-26	dB

Average Launch Power of OFF Transmitter	POFF			-30	dBm
Transmitter Power Excursion	TPE			2.3	dB

5、Encircled Flux Requirements

Parameter	Requirement
Encircled Flux at 19μm	≥86%
Encircled Flux at 4.5μm	≤30%

6、Receiver Optical Characteristics — Per Lane

Parameter	Symbol	Min	Typ.	Max	Unit
Optical Signaling Rate			53.125 ±100ppm		GBd
Optical Bit Rate			106.25		Gb/s
Modulation Format			PAM4		
Receiver Wavelength Range[1]	λR	840	850	860	nm
Damage Threshold	THd	+5.0			dBm
Average Receive Power	RXPx	-6.3		+4.0	dBm
Receive Power (OMAouter)	RxOMAouter			+3.5	dBm
Receiver Reflectance	RR			-26	dB
Receiver Sensitivity (OMAouter)[3]	Rsens			-4.4	dBm
Stressed Receiver Sensitivity (OMAouter)[4]	SRS			-1.8	dBm
LOS Assert[5]	LOSA	-30			dBm
LOS De-assert[5]	LOSD			-12	dBm
LOS Hysteresis[5]	LOSH	0.5			dB

7、Stressed Receiver Test Conditions

Parameter	Value	Unit
Stressed Eye Closure for PAM4 (SECQ)	4.4	dB
OMAouter of Each Aggressor Lane	3.5	dBm

Pre-FEC BER	2.4×10^{-4}	
Test Pattern	PRBS31Q	

Note 1: The current 840–860nm wavelength range should be confirmed against the actual VCSEL/ROSA specification. NVIDIA's directly corresponding MMA4Z00-NS400 specifies a slightly different wavelength window, so this value should not be changed solely from competitor data.

Note 2: ER ≥3.0dB is stricter than the 2.5dB value published by NVIDIA/Huawei for corresponding 50m OSFP products. Retain 3.0dB only if supported by the current module test specification.

Note 3: Receiver sensitivity is informative and should not be confused with average receive power.

Note 4: Stressed receiver sensitivity is measured using a PAM4 conformance test signal at a pre-FEC BER of 2.4×10^{-4}.

Note 5: LOS thresholds are implementation-specific and should only be retained if confirmed by the actual receiver/module test specification.

Recommended Host Board Power Supply Circuit

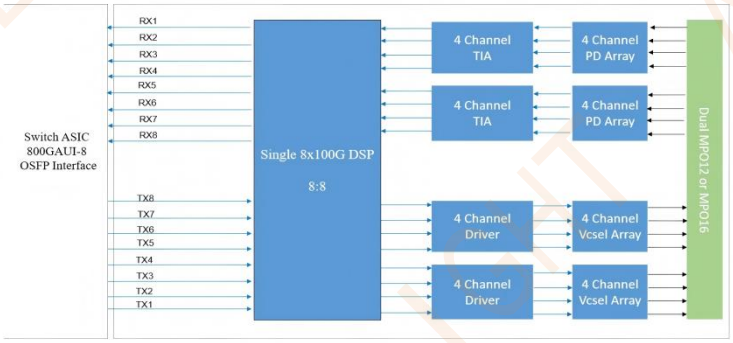

Figure 1: Module Block Diagram

Recommended Interface Circuit

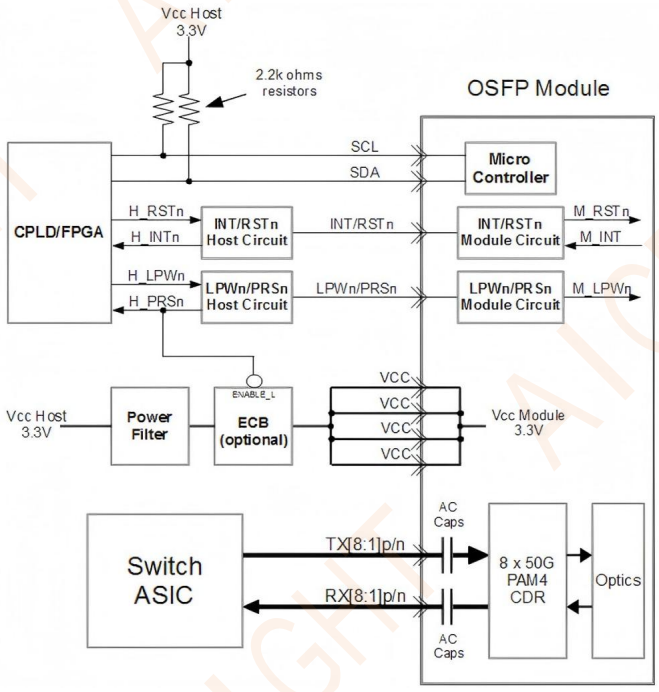

Figure2:Recommended Interface Circuit

Optical Interface

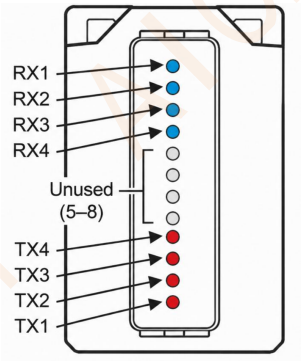

Figure3:Optical Lane Sequence

Pin-out Definition

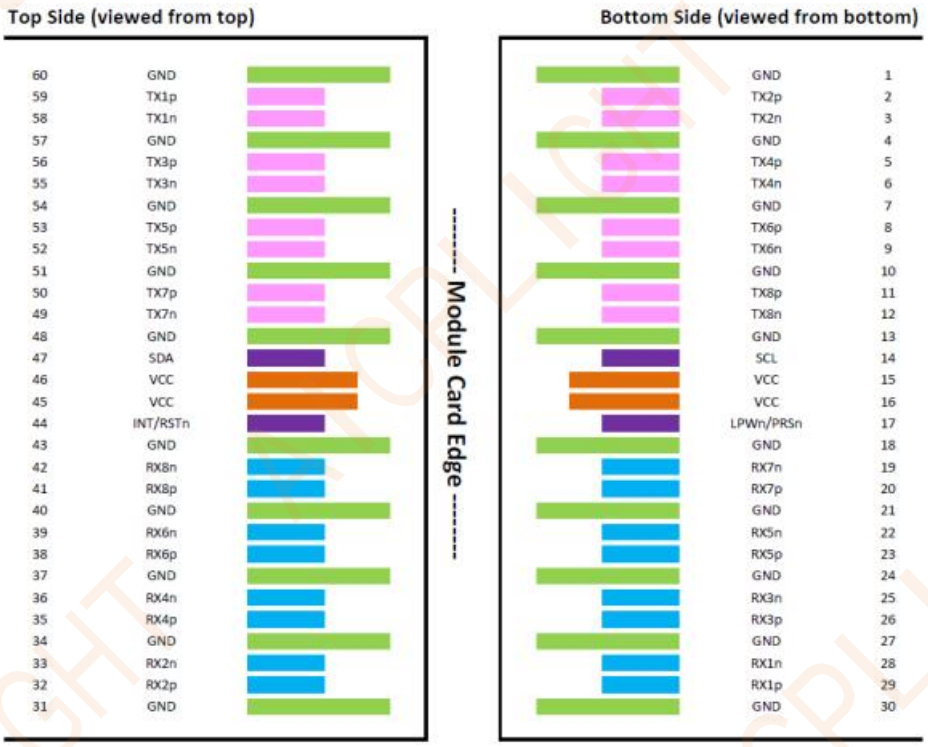

Figure4:Pin view(OSFP)

Pin Function Definitions

Pin	Logic	Symbol	Description	Note
1		GND	Ground	
2	CML-I	TX2p	Transmitter Data Non-Inverted	
3	CML-I	TX2n	Transmitter Data Inverted	
4		GND	Ground	

5	CML-I	TX4p	Transmitter Data Non-Inverted	
6	CML-I	TX4n	Transmitter Data Inverted	
7		GND	Ground	
8	CML-I	TX6p	Transmitter Data Non-Inverted	
9	CML-I	TX6n	Transmitter Data Inverted	
10		GND	Ground	
11	CML-I	TX8p	Transmitter Data Non-Inverted	
12	CML-I	TX8n	Transmitter Data Inverted	
13		GND	Ground	
14	LVCMOS-I/O	SCL	2-wire Serial interface clock	1
15		VCC	+3.3V Power	
16		VCC	+3.3V Power	
17	Multi-Level	LPWn/PRSn	Low-Power Mode / Module Present	2
18		GND	Ground	
19	CML-O	RX7n	Receiver Data Inverted	
20	CML-O	RX7p	Receiver Data Non-Inverted	
21		GND	Ground	
22	CML-O	RX5n	Receiver Data Inverted	
23	CML-O	RX5p	Receiver Data Non-Inverted	
24		GND	Ground	
25	CML-O	RX3n	Receiver Data Inverted	
26	CML-O	RX3p	Receiver Data Non-Inverted	
27		GND	Ground	
28	CML-O	RX1n	Receiver Data Inverted	
29	CML-O	RX1p	Receiver Data Non-Inverted	
30		GND	Ground	
31		GND	Ground	
32	CML-O	RX2p	Receiver Data Non-Inverted	
33	CML-O	RX2n	Receiver Data Inverted	
34		GND	Ground	
35	CML-O	RX4p	Receiver Data Non-Inverted	
36	CML-O	RX4n	Receiver Data Inverted	
37		GND	Ground	
38	CML-O	RX6p	Receiver Data Non-Inverted	
39	CML-O	RX6n	Receiver Data Inverted	
40		GND	Ground	
41	CML-O	RX8p	Receiver Data Non-Inverted	
42	CML-O	RX8n	Receiver Data Inverted	
43		GND	Ground	
44	Multi-Level	INT/RSTn	Module Interrupt / Module Reset	2

45		VCC	+3.3V Power	
46		VCC	+3.3V Power	
47	LVCMOS-I/O	SDA	2-wire Serial interface data	1
48		GND	Ground	
49	CML-I	TX7n	Transmitter Data Inverted	
50	CML-I	TX7p	Transmitter Data Non-Inverted	
51		GND	Ground	
52	CML-I	TX5n	Transmitter Data Inverted	
53	CML-I	TX5p	Transmitter Data Non-Inverted	
54		GND	Ground	
55	CML-I	TX3n	Transmitter Data Inverted	
56	CML-I	TX3p	Transmitter Data Non-Inverted	
57		GND	Ground	
58	CML-I	TX1n	Transmitter Data Inverted	
59	CML-I	TX1p	Transmitter Data Non-Inverted	
60		GND	Ground	

Note1: Open-Drain with pull up resistor on Host.

Note2: See pin description for required circuit.

Monitoring Specification

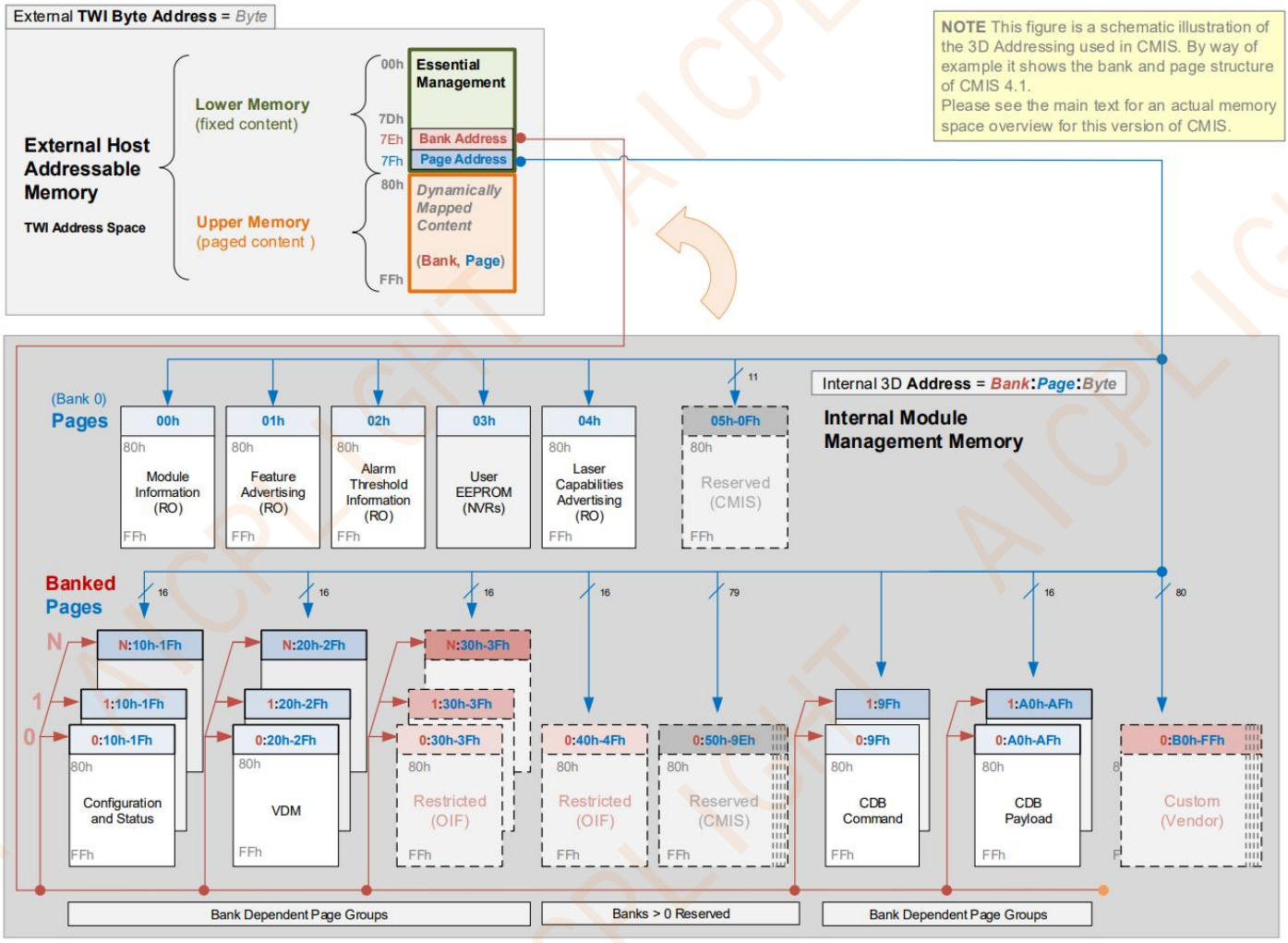

Figure5:Memory map

Memory map Table

Byte	Unit	Name	Description
Lower Page 00h			
0-2	3	Management Characteristics	Basic Information about how this module is managed
3	1	Global Status Information	Current state of Module, Interrupt signal status
4-7	4	Flag Summary	Summary of Flags set on specific Pages (and Banks)
8-13	6	Module-Level Flags	Flags that are not lane or Data Path specific
14-25	12	Module-Level Monitors	Monitors that are not lane or Data Path specific
26-30	5	Module-Level Controls	Controls applicable to the module as a whole
31-36	6	Module-Level Masks	Mask bits for the Module-Level Flags
37-38	2	CDB Command Status	Status of current CDB command
39-40	2	Module Active Firmware Version	Module Active Firmware Version number
41	1	Fault Information	Fault cause for entering ModuleFault state
42-63	22		Reserved

64-84	21		Custom
85-117	33	Supported Applications Advertising	Applications supported by module Data Path(s)
118-125	8	Password Facilities	Password Entry and Change (mechanism only)
126-127	2	Page Mapping	Page mapping into host addressable Upper Memory
Upper Page 00h			
128	1	SFF8024IdentifierCopy	Copy of Byte 00h:0
129-144	16	VendorName	Vendor name (ASCII)
145-147	3	Vendor OUI	Vendor IEEE company ID
148-163	16	Vendor PN	Part number provided by vendor (ASCII)
164-165	2	Vendor Rev	Revision level for part number provided by vendor (ASCII)
166-181	16	Vendor SN	Vendor Serial Number (ASCII)
182-189	8	DateCode	Manufacturing Date Code (ASCII)
190-199	10	CLEICode	Common Language Equipment Identification Code (ASCII)
200-201	2	ModulePowerCharacteristics	Module power characteristics
202	1	CableAssemblyLinkLength	Cable length (for cable assembly modules only)
203	1	ConnectorType	Connector type of the media interface
204-209	6	Copper Cable Attenuation	Attenuation characteristics (passive copper cables only)
210	1	MediaLaneInformation	Supported near end media lanes (all modules)
211	1	Cable Assembly Information	Far end modules information (cable assemblies only)
212	1	MediaInterfaceTechnology	Information on media side device or cable technology
213-220	8		Reserved
221	1		Custom
222	1	PageChecksum	Page Checksum over bytes 128-221
223-255	33		Custom

Mechanical Dimension

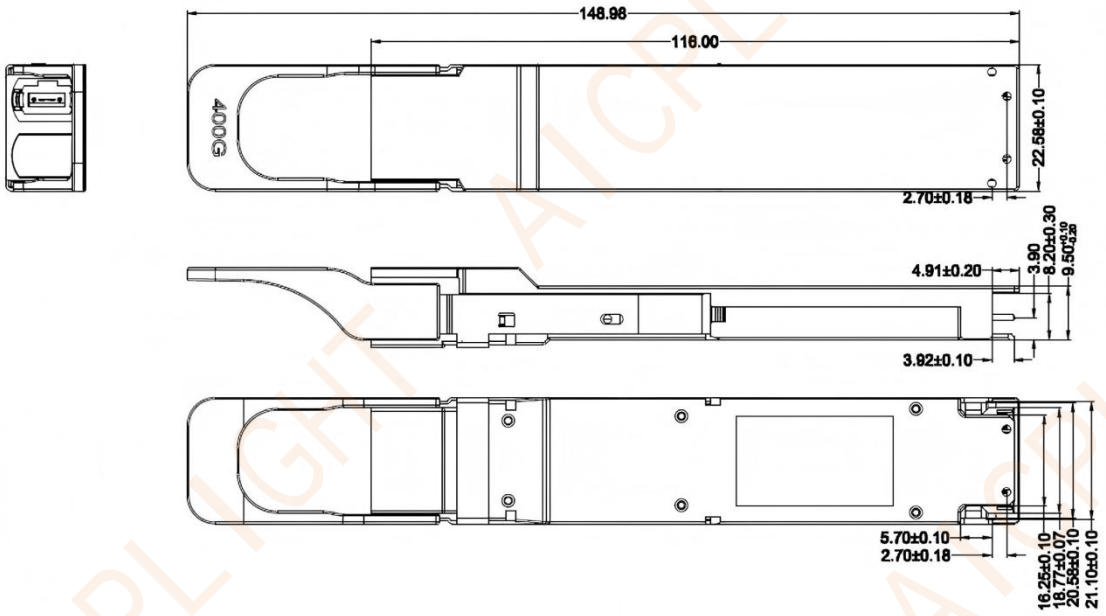

Handling and Safety Precautions:

- **ESD Protection:** Use proper electrostatic discharge (ESD) protection when handling, installing, or removing the module.
- **Installation and Removal:** Insert or remove the OSFP module using the pull tab or release mechanism. Do not force the module into the cage or pull on the fiber cable.
- **Form Factor Compatibility:** OSFP Flat Top and OSFP Finned Top modules are designed for different thermal and cage configurations and are not interchangeable. Always use the module type specified for the host system.
- **Thermal Management:** Ensure sufficient airflow and proper heatsink contact. Do not obstruct the module or system cooling path, as the module may become hot during operation.
- **Connector Cleaning:** Keep MTP/MPO or LC optical interfaces clean and protected with dust caps when not in use. Clean connector end faces before connection.
- **Fiber Handling:** Avoid excessive bending, pulling, twisting, or crushing of fiber cables. Follow the specified minimum bend radius.
- **Laser Safety:** Do not look directly into the optical port or connected fiber while the module is powered. Do not disassemble or modify the module.

Ordering Information

PN	Description
OSFP-NDR-SR4	400GBASE-SR4 OSFP Flat Top PAM4 850nm 50m DOM MTP/MPO-12 APC MMF InfiniBand NDR Optical Transceiver Module
OSFP-NDR-DRL4	400GBASE-DRL4 OSFP Flat Top PAM4 1310nm 100m DOM MTP/MPO-12 APC SMF InfiniBand NDR Optical Transceiver Module
OSFP-NDR-DR4	400GBASE-DR4 OSFP Flat Top PAM4 1310nm 500m DOM MTP/MPO-12 APC SMF InfiniBand NDR Optical Transceiver Module
Q112-NDR-SR4	400GBASE-SR4 QSFP112 PAM4 850nm 50m DOM MTP/MPO-12 APC MMF InfiniBand NDR Optical Transceiver Module
Q112-NDR-DR4	400GBASE-DR4 QSFP112 PAM4 1310nm 500m DOM MTP/MPO-12 APC SMF InfiniBand NDR Optical Transceiver Module