Product Specification

200GBASE-SR4 QSFP56 850nm 100m DOM MTP/MPO-12 APC MMF InfiniBand HDR Optical Transceiver Module

PN: Q56-200G-SR4



Features

- Hot-pluggable QSFP56 form factor
- Aggregate signaling rate of 212.5Gb/s
- 4 × 53.125Gb/s PAM4 electrical lanes
- 26.5625 GBd signaling rate per lane
- Single +3.3V power supply
- MTP/MPO-12 optical connector
- Maximum power consumption ≤5.0W
- Up to 70m over OM3 multimode fiber
- Up to 100m over OM4 multimode fiber
- 4-channel 850nm VCSEL transmitter array
- 4-channel PIN receiver array
- Built-in digital diagnostic monitoring
- Host-side FEC support according to host protocol requirements
- Supports 200Gb/s InfiniBand HDR applications
- Commercial case temperature range of 0°C to 70°C

Compliance

- QSFP56 MSA
- SFF-8665 (QSFP Pluggable Transceiver Solution)
- SFF-8636 (Management Interface)
- IEEE 802.3cd (200GBASE-SR4)
- InfiniBand Certified

Applications

- 200Gb/s InfiniBand HDR links
- InfiniBand HDR switch-to-adapter interconnects
- InfiniBand HDR switch-to-switch interconnects
- 200GBASE-SR4 Ethernet links
- 2 × 100GBASE-SR2 breakout links, when supported by the host platform
- 4 × 50GBASE-SR breakout links, when supported by the host platform
- QSFP56 switch, router, and network adapter connections
- AI and HPC cluster interconnects
- High-density data center networks

Description

The Q56-HDR-SR4 is a hot-pluggable QSFP56 optical transceiver designed for 200Gb/s InfiniBand HDR and Ethernet interconnects over parallel multimode fiber. It uses four independent PAM4 electrical lanes operating at 26.5625 GBd per lane, corresponding to 53.125Gb/s per lane and an aggregate signaling rate of 212.5Gb/s. The module supports transmission distances of up to 70 meters over OM3 multimode fiber and 100 meters over OM4 multimode fiber through a single MTP/MPO-12 optical interface.

The optical transmitter incorporates a four-channel 850nm VCSEL array, while the receiver uses a four-channel PIN photodiode array. Eight active fibers within the MTP/MPO-12 interface provide four transmit and four receive optical channels. The module uses parallel optical transmission without wavelength multiplexing or demultiplexing, enabling high-bandwidth connectivity for compatible QSFP56 network adapters and switches.

The module operates from a single 3.3V power supply with a maximum power consumption of 5.0W and supports a commercial case temperature range of 0° C to 70° C. Digital diagnostic monitoring and module management are provided through the two-wire management interface. The Q56-HDR-SR4 is intended for 200Gb/s InfiniBand HDR interconnects, AI and high-performance computing (HPC) clusters, and high-density data center networks. For Ethernet applications, FEC operation follows the applicable 200GBASE-SR4 requirements. For InfiniBand HDR deployments, FEC operation and platform compatibility must follow the applicable host system and InfiniBand implementation.

Product performance Specifications

1、Absolute Maximum Ratings

Parameter	Symbol	Min	Typ.	Max	Unit
Storage Temperature	TS	-40		+85	°C
Supply Voltage	VCC	-0.5		3.6	V
Relative Humidity	RH	5		85	%

2、Recommended Operating Conditions

Parameter	Symbol	Min	Typ.	Max	Unit
Operating Case Temperature	TC	0		70	°C
Power Supply Voltage	VCC	3.135	3.3	3.465	V
Power Dissipation	PD			5.0	W
Aggregate Signaling Rate	DR		212.5		Gb/s
Signaling Rate per Lane			26.5625 ±100ppm		GBd
Modulation Format			PAM4		
Maximum Link Distance on OM3				70	m

MMF					
Maximum Link Distance on OM4 MMF				100	m
Pre-FEC Bit Error Ratio	BER			2.4×10^{-4}	
FEC			RS(544,514)		

3、High-Speed Electrical Characteristics

Parameter	Symbol	Min	Typ.	Max	Unit
Signaling Rate per Lane			26.5625 ±100ppm		GBd
Modulation Format			PAM4		
Differential Input Voltage per Lane	VIN,pp,diff			900	mVpp
Differential Termination Mismatch				10	%
Single-Ended Voltage Tolerance Range		-0.4		3.3	V
DC Common-Mode Voltage	VCM	-350		2850	mV
Differential Output Voltage	VOUT,pp,diff			900	mVpp
Differential Output Termination Mismatch				10	%
Transition Time, 20% to 80%	Tr/Tf	9.5			ps

4、Transmitter Optical Characteristics — Per Lane

Parameter	Symbol	Min	Typ.	Max	Unit
Signaling Rate			26.5625 ±100ppm		GBd
Modulation Format			PAM4		
Center Wavelength	λC	840	850	860	nm
RMS Spectral Width	Δλ			0.6	nm
Average Launch Power	PAVG	-6.5		+4.0	dBm
Outer Optical Modulation Amplitude	OMAouter	-4.5		+3.0	dBm
Launch Power in OMAouter Minus TDECQ	OMAouter-TDECQ	-5.9			dBm
Transmitter and Dispersion Eye Closure for PAM4	TDECQ			4.5	dB
Extinction Ratio	ER	3.0			dB

Relative Intensity Noise	RIN12OMA			-128	dB/Hz
Optical Return Loss Tolerance	ORL			12	dB
Average Launch Power of OFF Transmitter	POFF			-30	dBm
Transmitter Transition Time				34	ps

5、Encircled Flux Requirements

Parameter	Value
Encircled Flux at 19μm	≥86%
Encircled Flux at 4.5μm	≤30%

6、Receiver Optical Characteristics — Per Lane

Parameter	Symbol	Min	Typ.	Max	Unit
Signaling Rate			26.5625 ±100ppm		GBd
Modulation Format			PAM4		
Receiver Wavelength Range	λR	840		860	nm
Damage Threshold	THd	+5.0			dBm
Average Receive Power	RXPx	-8.4		+4.0	dBm
Receive Power (OMAouter)	RxOMAouter			+3.0	dBm
Receiver Sensitivity (OMAouter)[1]	Rsens			max(-6.5, SECQ - 7.9)	dBm
Stressed Receiver Sensitivity (OMAouter)[2]	SRS			-3.4	dBm
Receiver Reflectance	RR			-12	dB
LOS Assert[3]	LOSA	-30			dBm
LOS De-assert[3]	LOSD			-9	dBm
LOS Hysteresis[3]	LOSH	0.5		5	dB

7、Stressed Receiver Test Conditions

Parameter	Value	Unit
Stressed Eye Closure for PAM4 (SECQ)	4.5	dB
OMAouter of Each Aggressor Lane	3.0	dBm

Pre-FEC BER	2.4×10^{-4}	
Test Pattern	PRBS31Q	

Note 1: Receiver sensitivity is informative and is defined for a transmitter with SECQ up to 4.5dB. Receiver sensitivity is calculated as RS = max(-6.5, SECQ - 7.9) dBm.

Note 2: Stressed receiver sensitivity is measured using a 200GBASE-SR4 conformance test signal at TP3 at a pre-FEC BER of 2.4×10^{-4}.

Note 3: LOS thresholds are implementation-dependent and should be verified against the actual receiver specification before final release.

Note 4: Even if TDECQ is less than 1.4dB, the minimum OMAouter must still meet the specified OMAouter minimum value.

Note 5: Average receive power minimum is informative and is not the principal indicator of receiver sensitivity.

Note 6: Optical transmitter and receiver specifications are defined per lane at a nominal PAM4 signaling rate of 26.5625GBd.

Recommended Host Board Power Supply Circuit

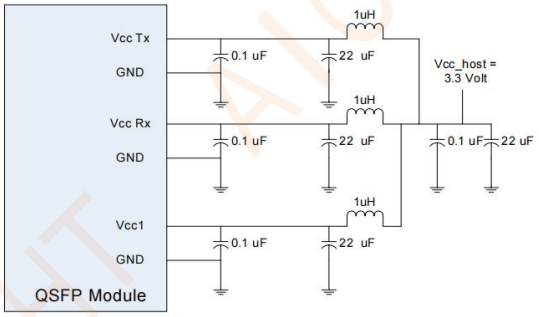

Figure 1: Recommended Host Board Power Supply Circuit

Recommended Interface Circuit

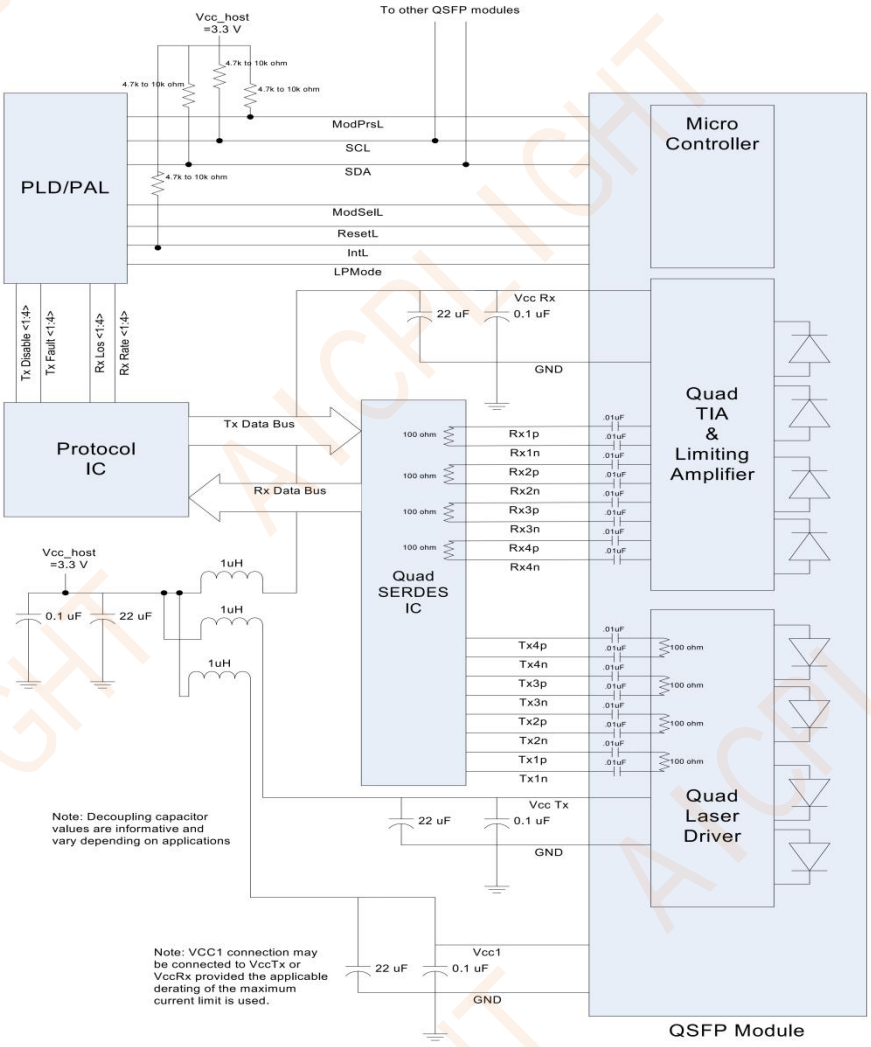

Figure2: Recommended Interface Circuit

Optical Interface

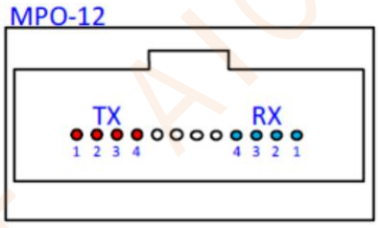

Figure3:Optical Lane Sequence

Pin-out Definition

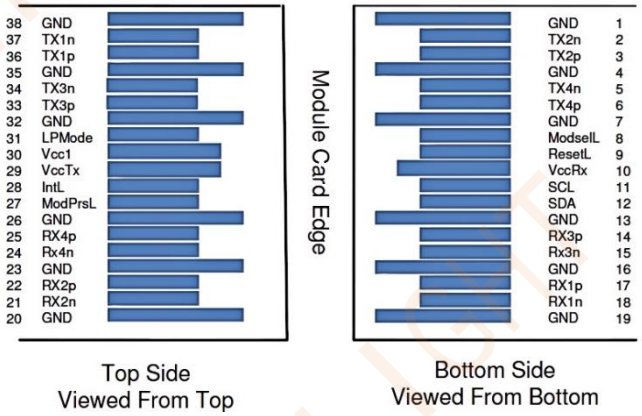

Figure4:Pin view

Pin Function Definitions

Pin	Logic	Symbol	Description	Note
1		GND	Ground	1
2	CML-I	Tx2n	Transmitter Inverted Data Input	3
3	CML-I	Tx2p	Transmitter Non-Inverted Data Input	3
4		GND	Ground	1
5	CML-I	Tx4n	Transmitter Inverted Data Input	3
6	CML-I	Tx4p	Transmitter Non-Inverted Data Input	3
7		GND	Ground	1
8	LVTTL-I	ModSelL	Module Select	4
9	LVTTL-I	ReSelL	Module Select	4
10		Vcc Rx	+3.3V Power Supply Receiver	2
11	LVCMOS-I/O	SCL	2-wire serial interface clock	4
12	LVCMOS-I/O	SDA	2-wire serial interface data	4
13		GND	Ground	1
14	CML-O	Rx3p	Receiver Non-Inverted Data Output	3

15	CML-O	Rx3n	Receiver Inverted Data Output	3
16		GND	Ground	1
17	CML-O	Rx1p	Receiver Non-Inverted Data Output	3
18	CML-O	Rx1n	Receiver Inverted Data Output	3
19		GND	Ground	1
20		GND	Ground	1
21	CML-O	Rx2n	Receiver Inverted Data Output	3
22	CML-O	Rx2p	Receiver Non-Inverted Data Output	3
23		GND	Ground	1
24	CML-O	Rx4n	Receiver Inverted Data Output	3
25	CML-O	Rx4p	Receiver Non-Inverted Data Output Ground	3
26		GND	Ground	1
27	LVTTL-O	ModPrsL	Module Present	4
28	LVTTL-O	IntL	Interrupt	4
29		Vcc Tx	+3.3V Power supply transmitter	2
30		Vcc1	+3.3V Power supply	2
31	LVTTL-I	LPMode	Low Power Mode	4
32		GND	Ground	1
33	CML-I	Tx3p	Transmitter Non-Inverted Data Input	3
34	CML-I	Tx3n	Transmitter Inverted Data Input	3
35		GND	Ground	1
36	CML-I	Tx1p	Transmitter Non-Inverted Data Input	3
37	CML-I	Tx1n	Transmitter Inverted Data Input	3
38		GND	Ground	1

Note1:GND is the symbol for signal and supply (power) common for the QSFP+ module. All are common within the QSFP+ module and all module voltages are referenced to this potential unless otherwise noted. Connect these directly to the host board signal-common ground plane.

Note2: Vcc Rx, Vcc1 and Vcc Tx are the receiver and transmitter power supplies and shall be applied concurrently. Requirements defined for the host side of the Host Edge Card Connector are listed in Table. Recommended host board power supply filtering is shown in Host board power supply circuit. Vcc Rx Vcc1 and Vcc Tx may be internally connected within the QSFP module in any combination. The connector pins are each rated for a maximum current of 500 mA.

Note3: High-speed signal interfaces require differential pairs (e.g. TX1+/TX1-) with tightly matched impedances (typically 100Ω).

Note4: The management and control signals are based on LVTTL level logic and are used for functions such as module selection and reset.

Monitoring Specification

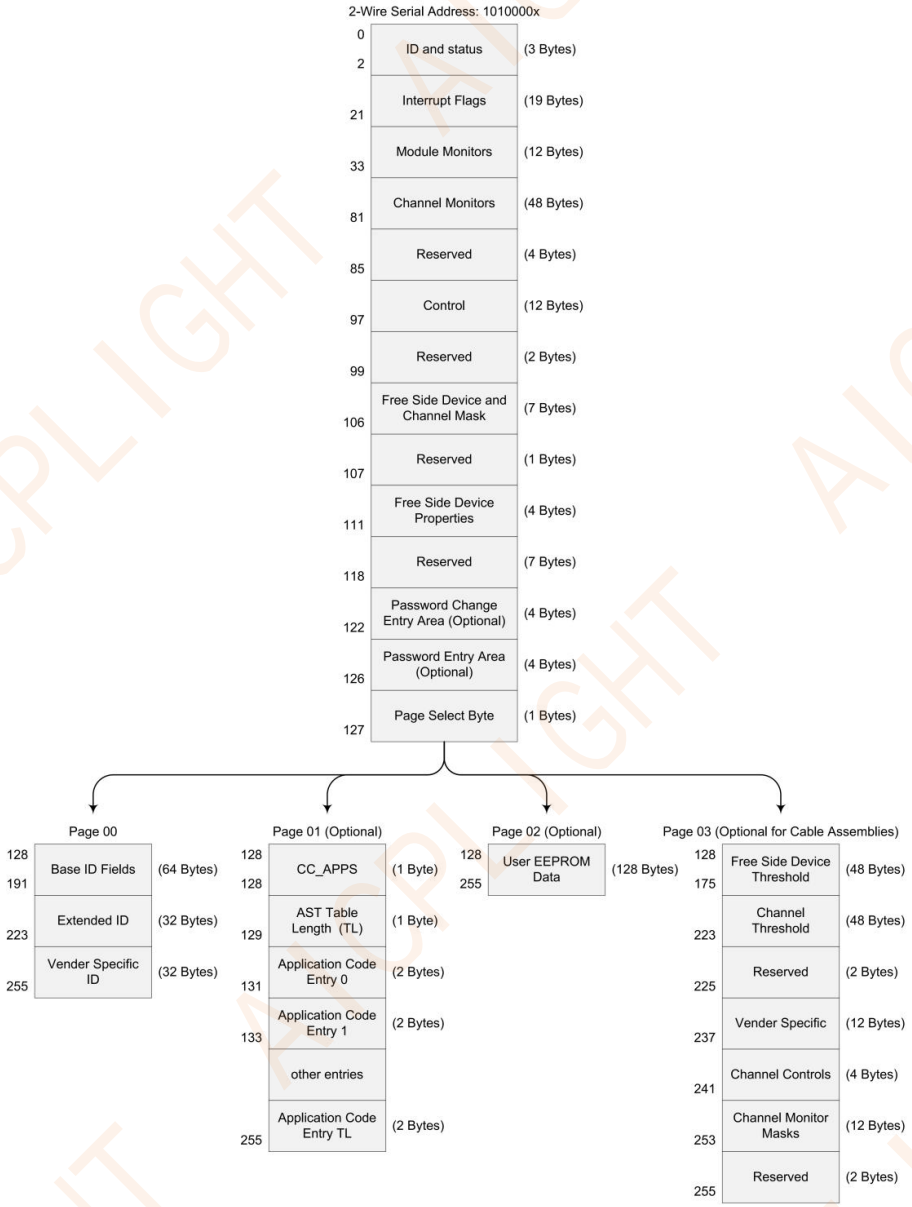

Figure5: Memory map

Memory map Table

Byte	Unit	Name	Description
			Lower Page 00h
0	1	Identifier	Type of transceiver,Page 00h Byte 0 and Page 00h Byte 128 shall contain the same parameter values.
1	1	Status	Revision Compliance
2	1	Status	Status indicators

3-21	19	Interrupt Flags	Consist of interrupt flags for LOS, Tx Fault, warnings and alarms. The non-asserted state shall be 0b.
22	1	Temperature MSB	Internally measured temperature (MSB)
23	1	Temperature LSB	Internally measured temperature (LSB)
24-25	2	Reserved	Reserved
26	1	Supply Voltage MSB	Internally measured supply voltage (MSB)
27	1	Supply Voltage LSB	Internally measured supply voltage (LSB)
28-29	2	Reserved	Reserved
30-33	4	Vendor Specific	Vendor Specific
34	1	Rx1 Power MSB	Internally measured Rx1 input power
35	1	Rx1 Power LSB	
36	1	Rx2 Power MSB	Internally measured Rx2 input power
37	1	Rx2 Power LSB	
38	1	Rx3 Power MSB	Internally measured Rx3 input power
39	1	Rx3 Power LSB	
40	1	Rx4 Power MSB	Internally measured Rx4 input power
41	1	Rx4 Power LSB	
42	1	Tx1 Bias MSB	Internally measured Tx1 bias
43	1	Tx1 Bias LSB	
44	1	Tx2 Bias MSB	Internally measured Tx2 bias
45	1	Tx2 Bias LSB	
46	1	Tx3 Bias MSB	Internally measured Tx3 bias
47	1	Tx3 Bias LSB	
48	1	Tx4 Bias MSB	Internally measured Tx4 bias
49	1	Tx4 Bias LSB	
50	1	Tx1 Power MSB	Internally measured Tx1 Power
51	1	Tx1 Power LSB	
52	1	Tx2 Power MSB	Internally measured Tx2 Power
53	1	Tx2 Power LSB	
54	1	Tx3 Power MSB	Internally measured Tx3 Power
55	1	Tx3 Power LSB	
56	1	Tx4 Power MSB	Internally measured Tx4 Power
57	1	Tx4 Power LSB	
58-65	8	Reserved	Reserved channel monitor set 4
66-73	8	Reserved	Reserved channel monitor set 5
74-81	8	Vendor Specific	Vendor Specific
82-85	4	Reserved	Reserved
86-99	14	Control	Control
100-106	7	Free Side Device and Channel Masks	Free Side Device and Channel Masks
107-110	4	Free Side Device Properties	Free Side Device Properties

111-112	2	Assigned for use by PCI Express	Used for: - The PCI Express External Cable Specification - The PCI Express OCuLink Specification
113-117	4	Free Side Device Properties	Free Side Device Properties
118	1	Reserved	Reserved
119-122	4	Password Change Entry Area	Password Change Entry Area
123-126	4	Password Entry Area	Password Entry Area
127	1	Page Select Byte	Page Select Byte
Upper Page 00h			
128	1	Identifier	Identifier Type of free side device.(See SFF-8024 Transceiver Management)
129	1	Ext. Identifier	Extended Identifier of free side device. Includes power classes, CLEI codes, CDR capability.
130	1	Connector Type	Code for media connector type. (See SFF-8024 Transceiver Management)
131-138	8	Specification Compliance	Code for electronic or optical compatibility.
139	1	Encoding	Code for serial encoding algorithm. (See SFF-8024 Transceiver Management)
140	1	Signaling rate, nominal	Nominal signaling rate, units of 100 MBd. For rate > 25.4 GBd, set this to FFh and use Byte 222.
141	1	Extended Rate Select Compliance	Tags for extended rate select compliance.
142	1	Length (SMF)	Link length supported at the signaling rate in byte 140 or page 00h byte 222, for SMF fiber in km *. A value of 1 shall be used for reaches from 0 to 1 km.
143	1	Length (OM3 50 um)	Link length supported at the signaling rate in byte 140 or page 00h byte 222, for EBW 50/125 um fiber (OM3), units of 2 m *
144	1	Length (OM2 50 um)	Link length supported at the signaling rate in byte 140 or page 00h byte 222, for 50/125 um fiber (OM2), units of 1 m *
145	1	Length (OM1 62.5 um) or Copper Cable Attenuation	Link length supported at the signaling rate in byte 140 or page 00h byte 222, for 62.5/125 um fiber (OM1), units of 1 m *, or copper cable attenuation in dB at 25.78 GHz.
146	1	Length (passive copper or active cable or OM4 50 um)	Length of passive or active cable assembly (units of 1 m) or link length supported at the signaling rate in byte 140 or page 00h byte 222, for OM4 50/125 um fiber (units of 2 m) as indicated by Byte 147. See 6.3.12.
147	1	Device technology	Device technology
148-163	16	Vendor name	Free side device vendor name (ASCII)
164	1	Extended Module	Extended Module codes for InfiniBand.
165-167	3	Vendor OUI	Free side device vendor IEEE company ID.
168-183	16	Vendor PN	Part number provided by free side device vendor(ASCII)
184-185	2	Vendor rev	Revision level for part number provided by the vendor(ASCII)

186-187	2	Wavelength or Copper Cable Attenuation	Nominal laser wavelength (wavelength=value/20 in nm) or copper cable attenuation in dB at 2.5 GHz (Byte 186) and 5.0 GHz (Byte 187)
188-189	2	Wavelength tolerance or Copper Cable Attenuation	The range of laser wavelength (+/- value) from nominal wavelength. (wavelength Tol. =value/200 in nm) or copper cable attenuation in dB at 7.0 GHz (Byte 188) and 12.9 GHz (Byte 189)
190	1	Max case temp	Maximum case temperature
191	1	CC_BASE	Check code for base ID fields (Bytes 128-190)
192	1	Link codes	Extended Specification Compliance Codes (See SFF-8024)
193-195	3	Options	Optional features implemented.
196-211	16	Vendor SN	Serial number provided by vendor.(ASCII)
212-219	8	Date Code	Vendor's manufacturing date code.
220	1	Diagnostic Monitoring Type	Indicates which type of diagnostic monitoring is implemented (if any) in the free side device. Bit 1,0 Reserved.
221	1	Enhanced Options	Indicates which optional enhanced features are implemented in the free side device.
222	1	CC_EXT	Check code for the Extended ID Fields (Bytes 192-222)
224-255	32	Vendor Specific	Vendor Specific EEPROM
Page 02h (Optional)			
128-255	128	User EEPROM Data	
Page 03h (Optional)			
128-129	2	Temp High Alarm	MSB at lower byte address
130-131	2	Temp Low Alarm	MSB at lower byte address
132-133	2	Temp High Warning	MSB at lower byte address
134-135	2	Temp Low Warning	MSB at lower byte address
136-143	8	Reserved	Reserved
144-145	2	Vcc High Alarm	MSB at lower byte address
146-147	2	Vcc Low Alarm	MSB at lower byte address
148-149	2	Vcc High Warning	MSB at lower byte address
150-151	2	Vcc Low Warning	MSB at lower byte address
152-159	8	Reserved	Reserved
160-175	16	Vendor Specific	Vendor Specific
176-177	2	Rx Power High Alarm	MSB at lower byte address
178-179	2	Rx Power Low Alarm	MSB at lower byte address
180-181	2	Rx Power High Warning	MSB at lower byte address
182-183	2	Rx Power Low Warning	MSB at lower byte address
184-185	2	Tx Bias High Alarm	MSB at lower byte address
186-187	2	Tx Bias Low Alarm	MSB at lower byte address
188-189	2	Tx Bias High Warning	MSB at lower byte address
190-191	2	Tx Bias Low Warning	MSB at lower byte address
192-193	2	Tx Power High Alarm	MSB at lower byte address
194-195	2	Tx Power Low Alarm	MSB at lower byte address
196-197	2	Tx Power High Warning	MSB at lower byte address

198-199	2	Tx Power Low Warning	MSB at lower byte address
200-207	8	Reserved	Reserved thresholds for channel parameter set 4
208-215	8	Reserved	Reserved thresholds for channel parameter set 5
216-223	8	Vendor Specific	Vendor Specific
224	1	Tx EQ & Rx Emphasis Magnitude ID	Tx EQ & Rx Emphasis Magnitude ID
225	1	Rx output amplitude support indicators	Rx output amplitude support indicators
226-229	4	Control options advertising	Control options advertising
230-241	12	Optional Channel Controls	Optional Channel Controls
242-247	6	Channel Monitor Masks	Channel Monitor Masks
248-249	2	Reserved	Reserved channel monitor masks set 4
250-251	2	Reserved	Reserved channel monitor masks set 5
252-255	4	Reserved	Reserved

Mechanical Dimension

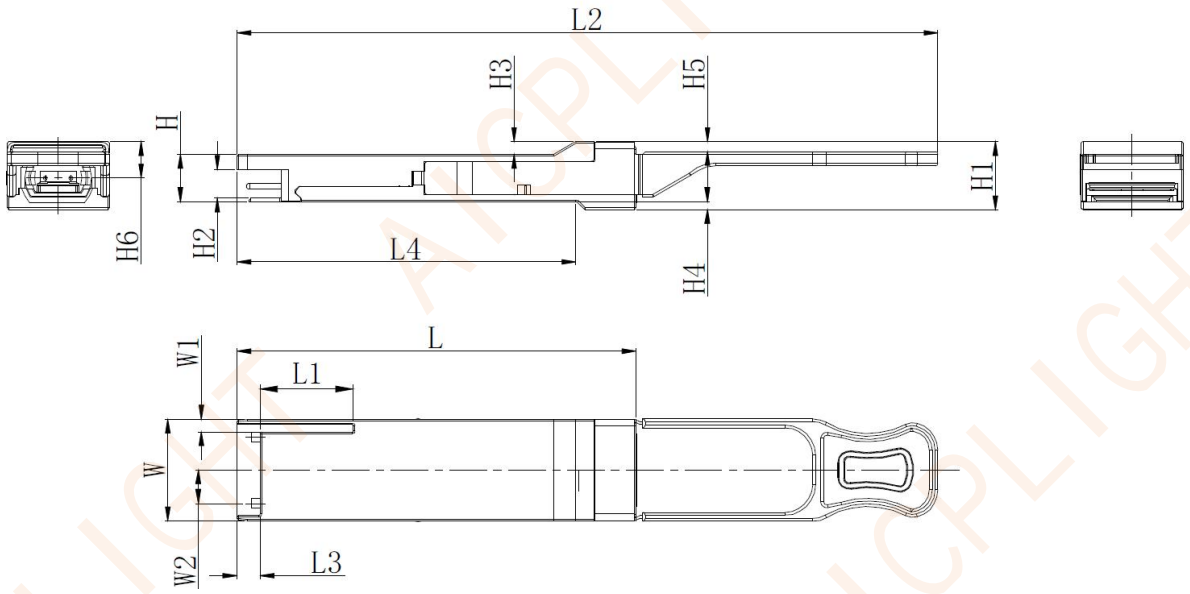

Handling and Safety Precautions：

- **ESD Precautions:** Follow standard electrostatic discharge (ESD) handling procedures when handling, installing, or removing the module. Use a grounded wrist strap or other appropriate ESD protection.
- **Hot-Plug Handling:** The QSFP+ module is hot-pluggable. Insert or remove the module only by holding the module housing and using the pull tab or release mechanism as intended.
- **Optical Connector Protection:** Keep the optical interface clean and protected from dust, moisture, oil, and other contaminants. Keep the dust cap installed whenever the optical connector is not in use.
- **Connector Cleaning:** Inspect and clean the MTP/MPO or LC connector end faces before connection. Do not touch the optical

end faces directly with fingers or unapproved materials.

- **Fiber Cable Handling:** Avoid excessive bending, pulling, twisting, crushing, or other mechanical stress on the fiber cable. Follow the minimum bend-radius requirements specified for the fiber assembly.
- **Installation and Removal:** Ensure the module is correctly aligned with the QSFP+ cage before insertion. Do not force the module into the port or remove it without releasing the latch or pull tab.
- **Optical and Laser Safety:** Do not look directly into the optical port or the end of a connected fiber while the module is powered. Avoid direct eye exposure to emitted optical radiation.
- **Mechanical Handling:** Do not drop, crush, strike, or apply excessive mechanical force to the module, optical receptacle, housing, or pull tab.
- **Operating Environment:** Do not operate the module outside the specified temperature, humidity, supply-voltage, or power limits. Ensure sufficient airflow around the module during operation.
- **Disassembly:** Do not disassemble, modify, or attempt to repair the module. Opening the module may damage the optical and electronic components and affect product performance.

Ordering Information

PN	Description
Q56-HDR-SR4	200GBASE-SR4 QSFP56 850nm 100m DOM MTP/MPO-12 APC MMF InfiniBand HDR Optical Transceiver Module
Q56-HDR-FR4	200GBASE-FR4 QSFP56 1310nm 2km DOM Dual Duplex LC/UPC SMF InfiniBand HDR Optical Transceiver Module