Product Specification

25GBASE-LR SFP28 25G 1310nm 10km DOM
Duplex LC/UPC SMF Optical Transceiver Module

PN: SFP-25G-LR

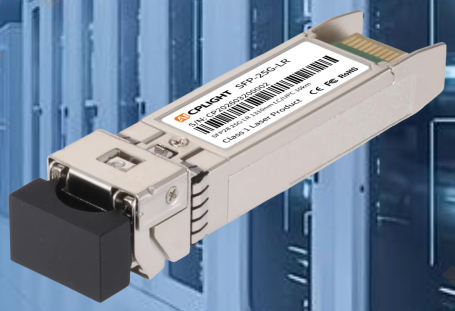

Features

- Hot Pluggable SFP28 form factor
- Operating data rate: 25.78125Gb/s
- Single +3.3V power supply
- Duplex LC connector
- Max power dissipation <1.2W
- Up to 10km transmission distance
- 1310nm DFB laser
- PIN receiver
- Built-in digital diagnostic function
- Metal enclosure for reduced EMI
- Commercial temperature range 0°C to 70°C
- Requires host-side RS-FEC for 25GBASE-LR operation

Compliance

- SFF-8402 (SFP28)
- SFF-8472
- SFF-8432
- Applicable portions of SFF-8431
- IEEE 802.3cc (25GBASE-LR)
- RoHS

Applications

- 25GBASE-LR Ethernet links
- 25G SFP28 switch and router ports
- Server and NIC connections
- Data center and enterprise backbones

Description

The SFP-25G-LR is a hot-pluggable SFP28 optical transceiver designed for IEEE 802.3cc 25GBASE-LR Ethernet links over single-mode fiber. It operates at a 25.78125 Gb/s NRZ signaling rate and supports transmission distances of up to 10 kilometers over SMF through a duplex LC/UPC optical interface. The transmitter uses a 1310nm DFB laser, while the receiver incorporates a PIN photodiode.

The module operates from a single 3.3V power supply with a maximum power consumption of 1.2W and supports a commercial case temperature range of 0° C to 70° C. It is designed for use with compatible 25G SFP28 host ports and requires host-side RS-FEC for standard 25GBASE-LR operation.

Digital diagnostic monitoring is provided through the 2-wire serial management interface in accordance with SFF-8472, allowing compatible host equipment to monitor module temperature, supply voltage, laser bias current, transmit optical power, and receive optical power. The SFP28 form factor follows SFF-8402 and is compatible with applicable SFF-8431 and SFF-8432 interface requirements.

Product performance Specifications

1、Absolute Maximum Ratings

Parameter	Symbol	Min	Typ.	Max	Unit
Storage Temperature	TS	-40		+85	°C
Supply Voltage	VCC	-0.5		3.63	V
Relative Humidity	RH	5		85	%

2、Recommended Operating Conditions

Parameter	Symbol	Min	Typ.	Max	Unit
Operating Case Temperature	TC	0	25	70	°C
Power Supply Voltage	VCC	3.135	3.3	3.465	V
Power Supply Current	ICC			300	mA
Power Dissipation	PD			1.2	W
Data Rate	DR		25.78125		Gb/s
Maximum Link Distance				10	km
Fiber Type			9/125 μm SMF		
FEC Requirement			RS-FEC		

3、Transmitter Optical Characteristics

Parameter	Symbol	Min	Typ.	Max	Unit
Signaling Rate			25.78125		GBd
Center Wavelength	λC	1295	1310	1325	nm
Side-Mode Suppression Ratio	SMSR	30			dB
Average Output Power	PAVG	-7.0		+2.0	dBm
Optical Modulation Amplitude	OMA	-4.0		+2.2	dBm
OMA minus TDP	OMA-TDP	-5.0			dBm
Extinction Ratio	ER	3.5			dB
Relative Intensity Noise	RIN			-130	dB/Hz
Optical Return Loss Tolerance	ORL			20	dB
Transmitter and Dispersion Penalty	TDP			2.7	dB
Optical Power for TX_DISABLE	POFF			-30	dBm
Transmitter Reflectance				-26	dB

4、Receiver Optical Characteristics

Parameter	Symbol	Min	Typ.	Max	Unit
Signaling Rate			25.78125		GBd
Receiver Wavelength Range	λR	1295		1325	nm
Average Receiver Power	PAVG	-13.3		+2.0	dBm
Receiver Sensitivity (OMA)[1]	Rsens			-12.0	dBm
Stressed Receiver Sensitivity (OMA)[2]	Rsens, stressed			-9.5	dBm
Maximum Receiver Power (OMA)				+2.2	dBm
Damage Threshold		+3.0			dBm
LOS Assert	LOSA	-30			dBm
LOS De-assert[3]	LOSD			-16	dBm
LOS Hysteresis	LOSH	0.5			dB
Receiver Reflectance				-26	dB

5、High-Speed Electrical Characteristics

Parameter	Symbol	Min	Typ.	Max	Unit
Electrical Signaling Rate			25.78125		GBd
Tx Input Differential Voltage	VI	180	500	900	mV
Tx Eye Height	EH	95			mV
Tx Eye Width	EW	0.46			UI
Rx Output Differential Voltage	VO	450	600	750	mV
Rx Eye Height	EH	228			mV
Rx Eye Width	EW	0.57			UI
Vertical Eye Closure	VEC			5.5	dB

Note 1: Receiver sensitivity (OMA) is specified for 25.78125 Gb/s NRZ operation with RS-FEC enabled at the host.

Note 2: Stressed receiver sensitivity is measured using a 25GBASE-LR conformance test signal at TP3 under the specified BER test conditions.

Note 3: LOS thresholds are implementation-dependent and should be verified against the actual receiver specification.

Note 4: The receiver output is squelched when RX_LOS is asserted.

Recommended Host Board Power Supply Circuit

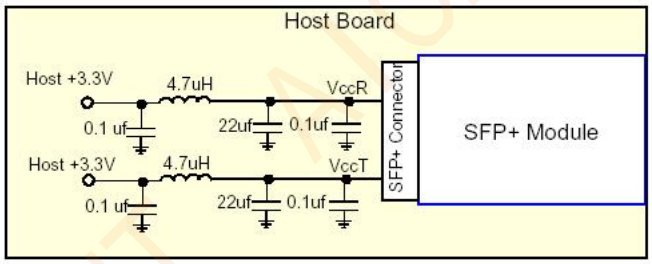

Figure 1: Recommended Host Board Power Supply Circuit

Recommended Interface Circuit

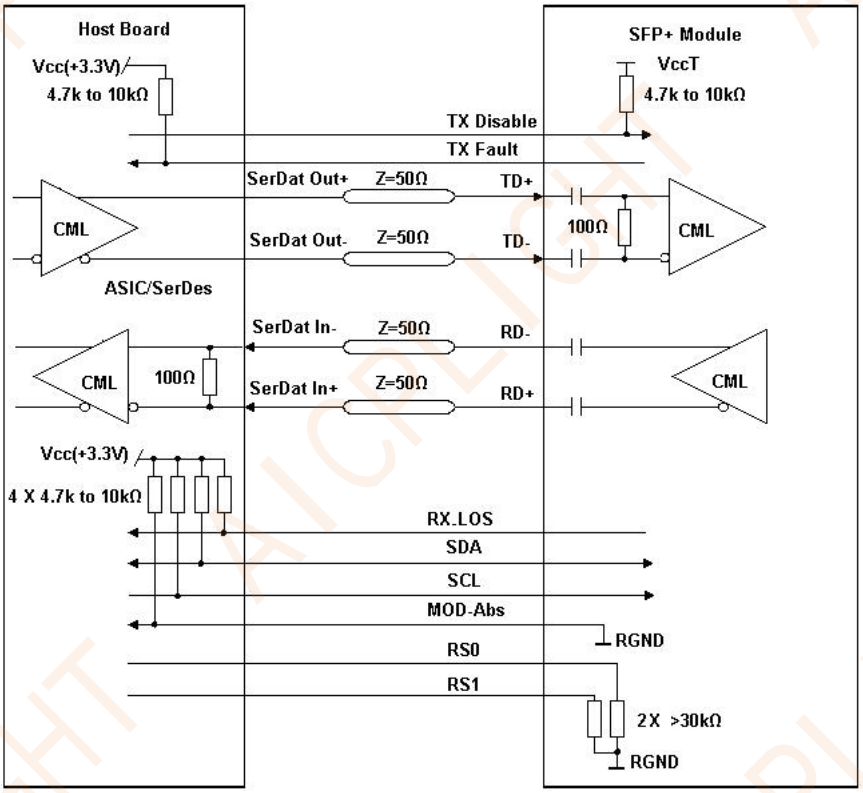

Figure2: Recommended Interface Circuit

Pin-out Definition

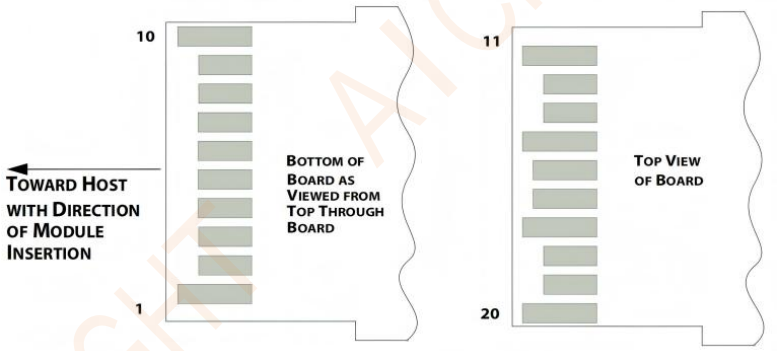

Figure3:Pin view

Pin Function Definitions

Pin	Logic	Symbol	Description	Note
1		VeeT	Module Transmitter Ground	1
2	LVTTL-O	TX_Fault	Module Transmitter Fault	2
3	LVTTL-I	TX_Disable	Transmitter Disable; Turns off transmitter laser output	3
4	LVTTL-I/O	SDA	2-wire Serial Interface Data Line (Same as MOD-DEF2 as defined in the INF-8074i)	4
5	LVTTL-I/O	SCL	2-wire Serial Interface Clock (Same as MOD-DEF1 as defined in the INF-8074i)	4
6		MOD_ABS	Module Absent, connected to VeeT or VeeR in the module	5
7	LVTTL-I	RS0	Adaptive multi-rate operation	6
8	LVTTL-O	RX_LOS	Receiver Loss of Signal Indication (In FC designated as RX_LOS, in SONET designated as LOS, and in Ethernet designated at Signal Detect)	2
9	LVTTL-I	RS1	Adaptive multi-rate operation	6
10		VeeR	Module Receiver Ground	1
11		VeeR	Module Receiver Ground	1
12	CML-O	RD-	Receiver Inverted Data Output	
13	CML-O	RD+	Receiver Non-Inverted Data Output	
14		VeeR	Module Receiver Ground	1
15		VccR	Module Receiver 3.3 V Supply	
16		VccT	Module Transmitter 3.3 V Supply	
17		VeeT	Module Transmitter Ground	1
18	CML-I	TD+	Transmitter Non-Inverted Data Input	
19	CML-I	TD-	Transmitter Inverted Data Input	
20		VeeT	Module Transmitter Ground	1

Note1: The module signal ground pins, VeeR and VeeT, shall be isolated from the module case.

Note2: This pin is an open collector/drain output pin and shall be pulled up with 4.7kΩ-10kΩ to Host_Vcc on the host board. Pull ups can be connected to multiple power supplies, however the host board design shall ensure that no module pin has voltage exceeding module VccT/R + 0.5V.

Note3: This pin is an open collector/drain input pin and shall be pulled up with 4.7kΩ-10kΩ to VccT in the module.

Note4: See SFF-8431 4.2 2-wire Electrical Specifications.

Note5: This pin shall be pulled up with 4.7kΩ-10kΩ to Host_Vcc on the host board.

Note6: Connect with 30kΩ load pulled down to GND in the module.

Monitoring Specification

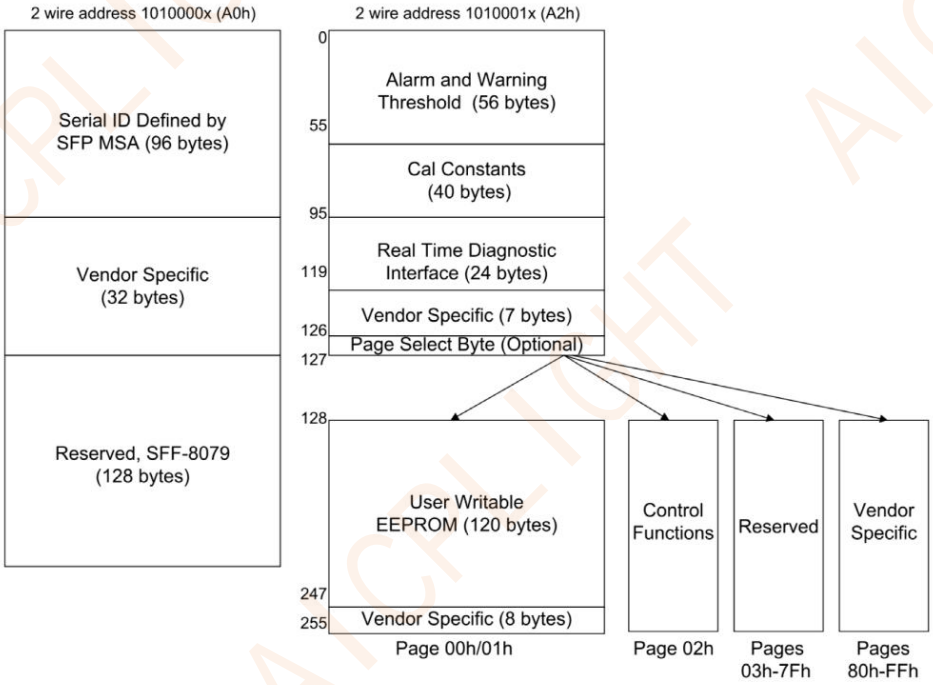

Figure4: Memory map

Memory map Table

Byte	Unit	Name	Description
A0h ID Fields			
0	1	Identifier	Type of transceiver
1	1	Ext. Identifier	Extended identifier of type of transceiver
2	1	Connector	Code for connector type
3-10	8	Transceiver	Code for electronic or optical compatibility
11	1	Encoding	Code for high speed serial encoding algorithm
12	1	Signaling Rate, Nominal	Nominal signaling rate, units of 100 MBd.
13	1	Rate Identifier	Type of rate select functionality

14	1	Length (SMF,km) or Copper Cable Attenuation	Link length supported for single-mode fiber, units of km, or copper cable attenuation in dB at 12.9 GHz
15	1	Length (SMF) or Copper Cable Attenuation	Link length supported for single-mode fiber, units of 100 m, or copper cable attenuation in dB at 25.78 GHz
16	1	Length (50 um, OM2)	Link length supported for 50 um OM2 fiber, units of 10 m
17	1	Length (62.5 um, OM1)	Link length supported for 62.5 um OM1 fiber, units of 10 m
18	1	Length (OM4 or copper cable)	Link length supported for 50um OM4 fiber, units of 10 m. Alternatively, copper or direct attach cable, units of m
19	1	Length (OM3) or Cable length, additional	Link length supported for 50 um OM3 fiber, units of 10 m. Alternatively, copper or direct attach cable multiplier and base value
20-35	16	Vendor name	SFP vendor name (ASCII)
36	1	Transceiver	Code for electronic or optical compatibility
37-39	3	Vendor OUI	SFP vendor IEEE company ID
40-55	16	Vendor PN	Part number provided by SFP vendor (ASCII)
56-59	4	Vendor rev	Revision level for part number provided by vendor (ASCII)
60-61	2	Wavelength	Laser wavelength (Passive/Active Cable Specification Compliance)
62	1	Fibre Channel Speed 2	Transceiver's Fibre Channel speed capabilities
63	1	CC_BASE	Check code for Base ID Fields (addresses 0 to 62)
64-65	2	Options	Indicates which optional transceiver signals are implemented
66	1	Signaling Rate, max	Upper signaling rate margin, units of %
67	1	Signaling Rate, min	Lower signaling rate margin, units of %
68-83	16	Vendor SN	Serial number provided by vendor (ASCII)
84-91	8	Date code	Vendor's manufacturing date code
92	1	Diagnostic Monitoring Type	Indicates which type of diagnostic monitoring is implemented (if any) in the transceiver
93	1	Enhanced Options	Indicates which optional enhanced features are implemented (if any) in the transceiver
94	1	SFF-8472 Compliance	Indicates which revision of SFF-8472 the transceiver complies with.
95	1	CC_EXT	Check code for the Extended ID Fields (addresses 64 to 94)
96-127	32	Vendor Specific	Vendor Specific EEPROM
128-255	128	Reserved	Reserved (was assigned to SFF-8079)
A2h ID Fields			
00-01	2	Temp High Alarm	MSB at low address
02-03	2	Temp Low Alarm	MSB at low address
04-05	2	Temp High Warning	MSB at low address
06-07	2	Temp Low Warning	MSB at low address
08-09	2	Voltage High Alarm	MSB at low address
10-11	2	Voltage Low Alarm	MSB at low address
12-13	2	Voltage High Warning	MSB at low address
14-15	2	Voltage Low Warning	MSB at low address
16-17	2	Bias High Alarm	MSB at low address

18-19	2	Bias Low Alarm	MSB at low address
20-21	2	Bias High Warning	MSB at low address
22-23	2	Bias Low Warning	MSB at low address
24-25	2	TX Power High Alarm	MSB at low address
26-27	2	TX Power Low Alarm	MSB at low address
28-29	2	TX Power High Warning	MSB at low address
30-31	2	TX Power Low Warning	MSB at low address
32-33	2	RX Power High Alarm	MSB at low address
34-35	2	RX Power Low Alarm	MSB at low address
36-37	2	RX Power High Warning	MSB at low address
38-39	2	RX Power Low Warning	MSB at low address
40-41	2	Optional Laser Temp High Alarm	MSB at low address
42-43	2	Optional Laser Temp Low Alarm	MSB at low address
44-45	2	Optional Laser Temp High Warning	MSB at low address
46-47	2	Optional Laser Temp Low Warning	MSB at low address
48-49	2	Optional TEC Current High Alarm	MSB at low address
50-51	2	Optional TEC Current Low Alarm	MSB at low address
52-53	2	Optional TEC Current High Warning	MSB at low address
54-55	2	Optional TEC Current Low Warning	MSB at low address
56-91	36	Ext Cal Constants or Additional Enhanced Features	Diagnostic calibration constants for optional External Calibration if External Calibration bit, A0h, byte 92, bit 4 is 1 Additional Enhanced Features advertisement, control and status if External Calibration bit, A0h, byte 92, bit 4 is 0
92-94	3	Reserved	
95	1	CC_DMI	Check code for Base Diagnostic Fields (addresses 0 to 94)
96-105	10	Diagnostics	Diagnostic Monitor Data (internally or externally calibrated)
106-109	4	Optional Diagnostics	Monitor Data for Optional Laser temperature and TEC current
110	1	Status/Control	Optional Status and Control Bits
111	1	Reserved	Reserved (was assigned to SFF-8079)
112-113	2	Alarm Flags	Diagnostic Alarm Flag Status Bits
114	1	Tx Input EQ control	Tx Input equalization level control
115	1	Rx Out Emphasis control	Rx Output emphasis level control
116-117	2	Warning Flags	Diagnostic Warning Flag Status Bits
118-119	2	Ext Status/Control	Extended module control and status bytes
120-126	7	Vendor Specific	Vendor specific memory addresses
127	1	Table Select	Optional Page Select
A2h Page 00-01h			
128-247	120	User EEPROM	User writable non-volatile memory
248-255	8	Vendor Control	Vendor specific control addresses

128-129	2	Reserved	Reserved for SFF-8690 (Tunable Transmitter)
130	1	Reserved	Reserved for future receiver controls
131	1	Rx Decision Threshold	RDT value setting
132-172	41	Reserved	Reserved for SFF-8690
173-255	83	Reserved	Reserved

Mechanical Dimension

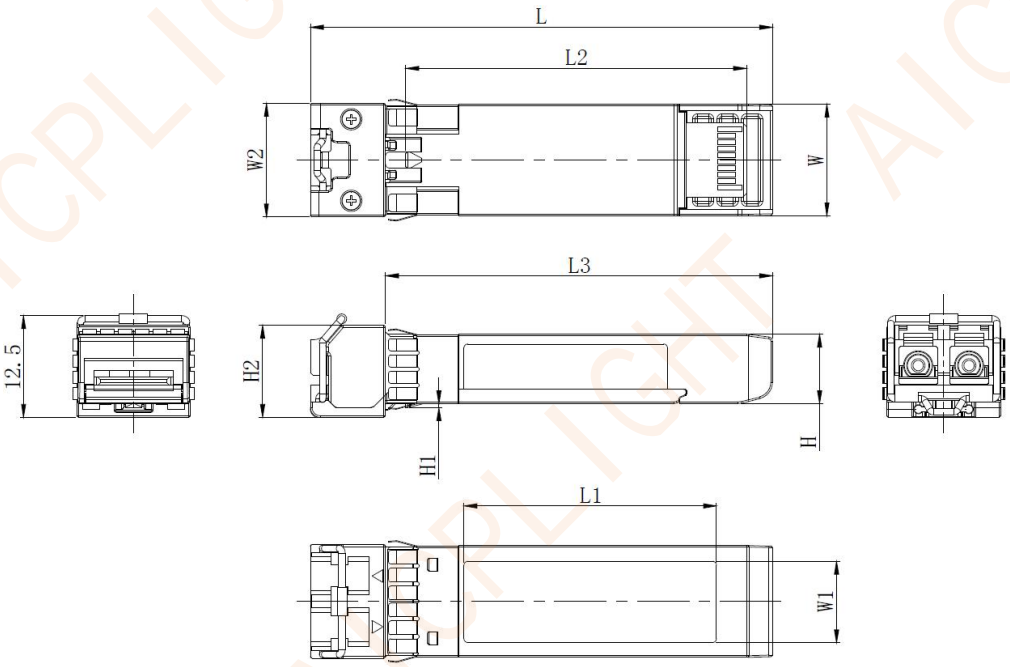

Unit:mm	L	L1	L2	L3	W	W1	W2	H	H1	H2
MIN	56.5	30.8	41.65	47.3	13.5	9.8	-	8.4	0.4	11.1
Typ.	56.7	31.0	41.80	47.5	13.7	10.0	-	8.5	0.5	11.3
MAX	56.9	31.2	41.95	47.7	13.8	10.2	14.0	8.6	0.6	11.5

Unit:mm	L	L1	L2	L3	W	W1	W2	H	H1	H2
MIN	56.5	30.8	41.65	47.3	13.5	9.8	-	8.4	0.4	11.1
Typ.	56.7	31.0	41.80	47.5	13.7	10.0	-	8.5	0.5	11.3
MAX	56.9	31.2	41.95	47.7	13.8	10.2	14.0	8.6	0.6	11.5

Handling and Safety Precautions：

- **ESD Precautions:** Follow standard electrostatic discharge (ESD) handling procedures when handling, installing, or removing the module. Use a grounded wrist strap or other appropriate ESD protection.

- **Hot-Plug Handling:** The module is hot-pluggable. Insert or remove it only by holding the module housing and using the latch or release mechanism as intended.
- **Optical Connector Protection:** Keep the LC optical interface clean and protected from dust, moisture, oil, and other contaminants. Keep the dust cap installed whenever the optical connector is not in use.
- **Fiber Connector Cleaning:** Inspect and clean the fiber connector end faces before connection. Do not touch the optical end faces directly with fingers or unapproved materials.
- **Fiber Cable Handling:** Avoid excessive bending, pulling, twisting, crushing, or other mechanical stress on the fiber patch cord. Follow the minimum bend-radius requirements specified for the fiber cable.
- **Installation and Removal:** Ensure the module is properly aligned with the SFP cage before insertion. Do not force the module into the port or remove it without releasing the latch.
- **Optical and Laser Safety:** Do not look directly into the optical port or the end of a connected fiber while the module is powered. Avoid direct eye exposure to emitted optical radiation.
- **Mechanical Handling:** Do not drop, crush, strike, or apply excessive mechanical force to the module, optical receptacle, or latch mechanism.
- **Operating Environment:** Do not operate the module outside the specified temperature, humidity, or supply-voltage limits.
- **Disassembly:** Do not disassemble, modify, or attempt to repair the module. Opening the module may damage the optical and electronic components and affect product performance.

Ordering Information

PN	Description
SFP-25G-SR	25GBASE-SR SFP28 25G 850nm 100m DOM Duplex LC/UPC MMF Optical Transceiver Module
SFP-25G-LR	25GBASE-LR SFP28 25G 1310nm 10km DOM Duplex LC/UPC SMF Optical Transceiver Module