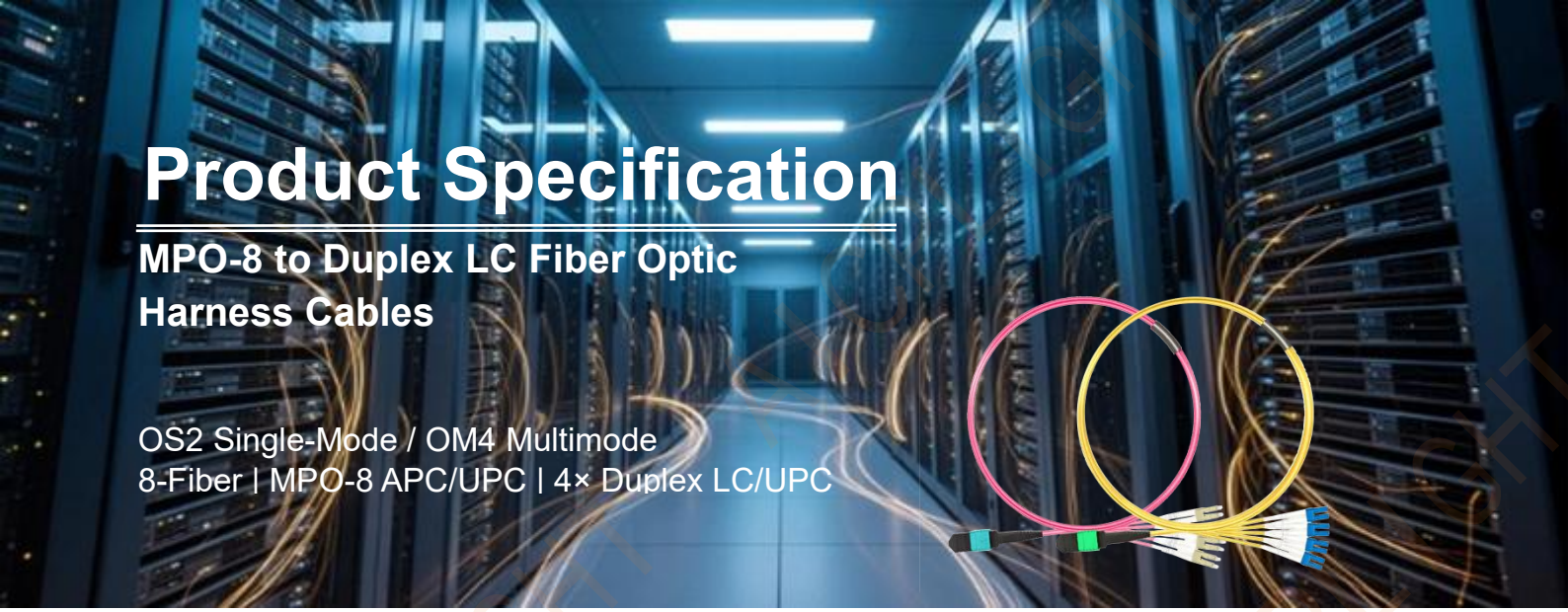

Product Specification

MPO-8 to Duplex LC Fiber Optic Harness Cables

OS2 Single-Mode / OM4 Multimode
8-Fiber | MPO-8 APC/UPC | 4× Duplex LC/UPC

Features

- MPO-8 to 4 × Duplex LC/UPC harness configuration
- OS2 single-mode and OM4 multimode fiber options
- Type B polarity
- Low insertion loss and high return loss
- Factory terminated and individually tested
- OFNP Plenum-rated cable jacket
- Available in lengths from 1 m to 50 m

Compliance

- RoHS Directive 2011/65/EU and (EU) 2015/863
- ANSI/TIA-568.3-E
- ANSI/TIA-604-5-F (FOCIS 5)
- IEC 61754-7-1 (MPO) and IEC 61754-20 (LC)
- NFPA 262 / UL 910 (OFNP Plenum Rating)

Applications

- Data Center Fiber Interconnections
- AI and HPC Cluster Networks
- High-Speed Ethernet and InfiniBand Networks
- MPO-to-LC Fiber Distribution

Description

AICPLIGHT MPO-8 to Duplex LC Fiber Optic Harness Cables are designed for high-density optical interconnections in data centers, AI computing clusters, and high-performance networking environments.

Each harness converts one 8-fiber MPO interface into four independent Duplex LC/UPC connections, enabling efficient transitions from parallel-optics infrastructure to duplex optical interfaces. The series is available in OS2 single-mode and OM4 multimode configurations, both featuring Type B polarity.

The OS2 version uses an MPO-8 APC female connector on the trunk side, while the OM4 version uses an MPO-8 UPC female connector. Both configurations terminate in four Duplex LC/UPC connectors and feature an OFNP Plenum-rated jacket.

With factory termination, low-loss connector interfaces, and flexible cable lengths, these harness cables simplify installation, improve cable management, and provide reliable connectivity between high-density fiber backbone systems and network equipment.

Product Performance Specifications

1、Model Configuration

Parameter	S2-8FB-MPOA-8DLCU	M4-8FB-MPOU-8DLCU
Fiber Mode	Single-mode	Multimode
Fiber Type	OS2	OM4
Fiber Count	8 Fibers	8 Fibers
Connector A	MPO-8 Female	MPO-8 Female
Connector A Polish	APC	UPC
Connector B	4 × Duplex LC	4 × Duplex LC
Connector B Polish	UPC	UPC
Connector Gender (MPO)	Female	Female
Polarity	Type B	Type B
Cable Jacket	OFNP	OFNP
Cable Color	Yellow	Magenta
Available Length	1–50 m	1–50 m

2、Optical Fiber Characteristics

Parameter	OS2 Single-Mode	OM4 Multimode
Core / Cladding Diameter	9/125 μm	50/125 μm

Operating Wavelength	1310 / 1550 nm	850 / 1300 nm
Maximum Attenuation	≤0.32 dB/km @1310 nm; ≤0.18 dB/km @1550 nm	≤2.3 dB/km @850 nm; ≤0.6 dB/km @1300 nm
Minimum Overfilled Launch (OFL) Bandwidth		≥3500 MHz·km @850 nm; ≥500 MHz·km @1300 nm
Minimum Effective Modal Bandwidth (EMB)		≥4700 MHz·km @850 nm
Minimum Bend Radius (Optical Fiber)	10 mm	7.5 mm

3、MPO Connector Optical Performance

Parameter	OS2 APC	OM4 UPC
Maximum Insertion Loss	≤0.35 dB	≤0.35 dB
Minimum Return Loss	≥60 dB	≥30 dB

4、LC Connector Optical Performance

Parameter	OS2 LC/UPC	OM4 LC/UPC
Maximum Insertion Loss	≤0.20 dB	≤0.20 dB
Minimum Return Loss	≥50 dB	≥30 dB
Connector Configuration	Duplex	Duplex

5、Physical and Mechanical Characteristics

Parameter	OS2	OM4
Main Cable Diameter	3.0 mm	Main Cable Diameter
Breakout Leg Diameter	2.0 mm	Breakout Leg Diameter
Standard Breakout Leg Length	0.3 m / 0.5 m	Standard Breakout Leg Length
Breakout Configuration	4 × Duplex LC	Breakout Configuration
Minimum Bend Radius (Cable)	10 × Cable OD (Static); 20 × Cable OD (Under Load)	Minimum Bend Radius (Cable)
Pulling Eye	Optional	Pulling Eye
Breakout Leg Staggering	Customizable	Breakout Leg Staggering

6、Environmental Characteristics

Parameter	Specification
Cable Jacket Rating	OFNP (Plenum)
Operating Temperature	-10°C to +70°C (14°F to 158°F)
Storage Temperature	-40°C to +85°C (-40°F to 185°F)

Mechanical Dimension

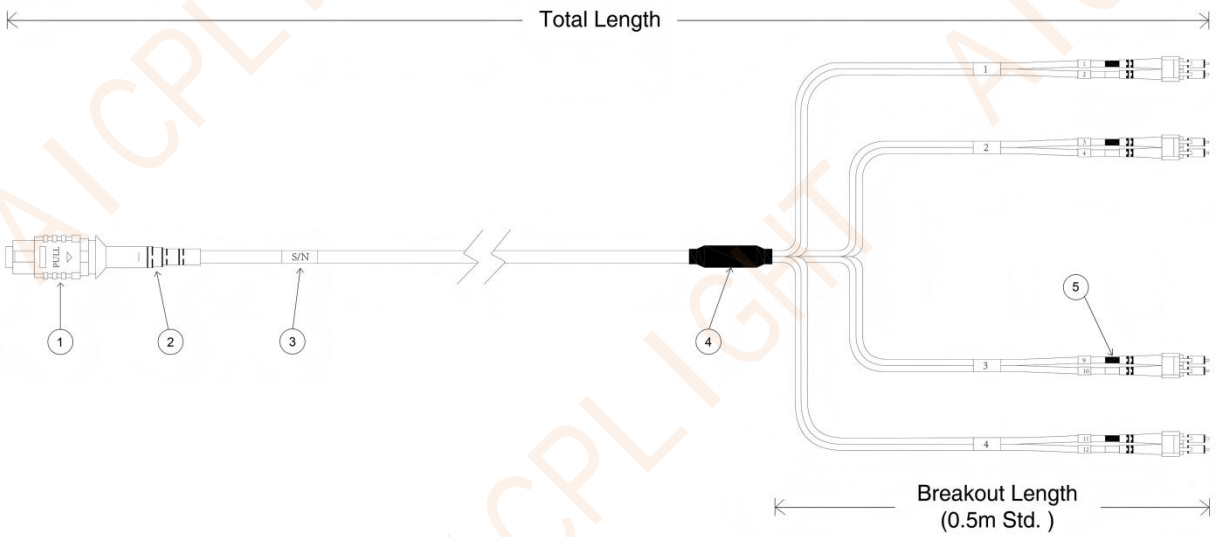

Note：

Length tolerance: L ≤ 1 m: ±0.05 m; 1 m < L < 20 m: ±0.10 m; L ≥ 20 m: ±1% of the nominal length. Overall length is measured from the front mating face of Connector A to the front mating face of.

Handling and Safety Precautions：

- **Bend Radius:** Do not bend the cable below the specified minimum bend radius. Avoid sharp bends, tight loops, or excessive bending during installation and operation.
- **Cable Handling:** Avoid excessive pulling, twisting, crushing, stretching, or other mechanical stress that may damage the optical fibers or cable structure.
- **Installation and Removal:** Handle connectors by their housings. Do not pull directly on the cable or apply excessive force when mating or unmating connectors. Ensure proper connector key alignment before connection.
- **Connector Protection:** Keep connector endfaces clean and protected with dust caps when not in use. Avoid touching the fiber endfaces or exposing them to dust, oil, moisture, or other contaminants.
- **Cleaning and Inspection:** Inspect and clean connector endfaces using appropriate fiber optic cleaning tools before mating. Always verify connector cleanliness to minimize insertion loss and prevent endface damage.
- **Optical Safety:** Never look directly into fiber connector endfaces or exposed optical fibers, especially when connected to active optical equipment. Invisible laser radiation may be present and can cause eye injury

Ordering Information

PN	Description
S2-8FB-MPOA-8DLCU	MPO-8 APC Female to 4 × Duplex LC/UPC Connectors OS2 Single-Mode Fiber Optic Breakout Cable, 8 Fibers, Type B, Plenum (OFNP), Yellow
M4-8FB-MPOU-8DLCU	MPO-8 UPC Female to 4 × Duplex LC/UPC Connectors OM4 Multimode Fiber Optic Breakout Cable, 8 Fibers, Type B, Plenum (OFNP), Magenta

Note:

Standard lengths are available in 1 m, 3 m, 5 m, 10 m, 15 m, 20 m, 30 m, 40 m, and 50 m.

Custom lengths are available upon request. Non-standard lengths are generally not held in stock and are