Product Specification

0.5~5m 100G QSFP28 to 100G QSFP28 InfiniBand EDR Passive Direct Attach Copper Twinax Cablel

PN: Q100-EDR-C



Features

- Supports 100G InfiniBand EDR and 100G Ethernet connectivity
- 4 × 25.78125 Gb/s NRZ electrical lanes
- 103.125 Gb/s aggregate raw line rate
- 4-channel full-duplex electrical interface
- Passive shielded twinaxial copper cable design
- Available in 26 AWG, 28 AWG and 30 AWG
- Cable lengths from 0.5 m to 5 m
- Hot-pluggable QSFP28 interfaces
- Maximum power dissipation: <0.5 W
- Two-wire I²C management interface with programmable EEPROM identification
- Commercial operating case temperature range: 0°C to +70°C

Compliance

- IBTA InfiniBand EDR compatibility
- QSFP28 MSA / SFF-8665
- SFF-8679 / SFF-8636
- IEEE 802.3bj (100GBASE-CR4)
- RoHS compliant

Applications

- 100G InfiniBand EDR Networks
- 100G Ethernet (100GBASE-CR4)
- AI/ML and GPU Computing
- High-Performance Computing (HPC)
- InfiniBand Switch-to-HCA and Server Interconnections
- Data Center and Intra-Rack Networking

Description

The Q100-EDR-C is a high-performance passive direct attach copper (DAC) twinax cable designed for short-reach 100G InfiniBand EDR and compatible 100G Ethernet interconnections in data center and high-performance computing environments. Featuring QSFP28 connectors on both ends, the cable utilizes four 25.78125 Gb/s NRZ electrical lanes in each direction, providing an aggregate raw electrical line rate of 103.125 Gb/s.

Featuring a passive shielded twinaxial copper architecture without active signal-conditioning components in the high-speed data path, the Q100-EDR-C provides low-latency and power-efficient connectivity. Available in 26 AWG, 28 AWG and 30 AWG options and lengths from 0.5 m to 5 m, it is suitable for short-distance connections between InfiniBand EDR switches, host channel adapters (HCAs), servers, network adapters, and storage systems.

The hot-pluggable QSFP28 interfaces simplify installation and deployment, while the two-wire I^2C management interface supports EEPROM-based cable identification and programmable vendor information. The passive copper architecture eliminates the need for separate optical transceivers and fiber patch cables, providing a cost-effective solution for high-density networking.

The Q100-EDR-C is designed for 100G InfiniBand EDR interconnections and compatible 100G Ethernet applications based on 100GBASE-CR4. It is designed in accordance with QSFP28 MSA, SFF-8665, SFF-8679, SFF-8636, IEEE 802.3bj, and RoHS requirements.

Product performance Specifications

1、Absolute Maximum Ratings

Parameter	Symbol	Min	Typ.	Max	Unit
Storage Temperature	TS	-40		+85	°C
Supply Voltage	VCC	-0.3		3.6	V
Relative Humidity	RH	5		85	%

2、Recommended Operating Conditions

Parameter	Symbol	Min	Typ.	Max	Unit
Operating Case Temperature	TC	0		+70	°C
Power Supply Voltage	VCC	3.135	3.3	3.465	V

3、General Product Specifications

Parameter	Specification	Condition
Product Type	Passive Direct Attach Copper (DAC) Cable	

Connector Configuration	QSFP28 to QSFP28	
Aggregate Data Rate	100 Gbps	
Raw Electrical Line Rate	103.125 Gbps	4 × 25.78125 Gb/s
Electrical Signaling	NRZ	
Number of Channels	4 Full-Duplex Channels	
Data Rate per Lane	25.78125 Gb/s	
Electrical Lane Configuration	4 Tx + 4 Rx differential pairs	
Cable Length	0.5-5 m	
Cable Gauge	26 AWG, 28 AWG, 30 AWG	
Cable Type	Passive Shielded Twinaxial Copper	
Hot Pluggable	Supported	
Management Interface	Two-wire I²C	
Module Identification	EEPROM	

4、Power Supply and Management Interface

Parameter	Symbol	Min	Typ.	Max	Unit
Power Dissipation	PD			<0.5	W
Management Interface			Two-wire I²C		
Module Identification			EEPROM		

5、High-Speed Signal Integrity Characteristics

Parameter	Symbol	Min	Typ.	Max	Unit	Condition
Characteristic Impedance	Zdiff	90	100	110	Ω	TDR
Differential Insertion Loss	ILdd	8		22.48	dB	At 12.8906 GHz
Channel Operating Margin	COM	3			dB	

6、Frequency-Dependent Signal Integrity Limits

Parameter	Symbol	Frequency Range (GHz)	Requirement	Unit
Differential Return Loss	RLdd(f)	0.05 ≤ f < 4.1	≥ 16.5 − 2√f	dB
		4.1 ≤ f ≤ 19	≥ 10.66 − 14log10(f/5.5)	dB

Common-Mode-to-Common-Mode Return Loss	RLcc(f)	0.2 ≤ f ≤ 19	≥ 2	dB
Differential-to-Common-Mode Return Loss	RLcd(f)	0.01 ≤ f < 12.89	≥ 22 − (20/25.78)f	dB
		12.89 ≤ f ≤ 19	≥ 15 − (6/25.78)f	dB
Differential-to-Common-Mode Conversion Loss Difference	SCD21 − SDD21	0.01 ≤ f < 12.89	≥ 10	dB
		12.89 ≤ f < 15.7	≥ 27 − (29/22)f	dB
		15.7 ≤ f ≤ 19	≥ 6.3	dB

7、Cable Construction

Parameter	Specification
Cable Architecture	8 differential signal pairs (4 Tx + 4 Rx)
Cable Type	Shielded Twinaxial Copper
Conductor Material	Solid silver-plated copper
Conductor Gauge	26 AWG, 28 AWG, 30 AWG
Pair Drain Wire	28 AWG for 26 AWG cable; 30 AWG for 28 AWG and 30 AWG cable
Insulation Material	Foam polyolefin
Overall Cable Shield	Aluminum/polyester tape and tinned copper braid
Foil Coverage	125%
Braid Specification	38 AWG; 85% coverage

8、Cable Electrical Characteristics by AWG

Parameter	26 AWG	28 AWG	30 AWG	Unit
Differential Impedance	100±5	100±5	100±5	Ω
Mutual Capacitance	14	14	14	pF/ft
Propagation Delay	1.35	1.35	1.35	ns/ft
Intra-Pair Skew	120 ps / 8.5 m maximum	120 ps / 7 m maximum	50 ps / 5.5 m maximum	
Inter-Pair Skew	500 ps / 8.5 m maximum	500 ps / 7 m maximum	350 ps / 5.5 m maximum	
Conductor DC Resistance at 20°C (Typical)	0.041	0.065	0.103	Ω/ft

9、Mechanical Performance

Parameter	Specification	Unit
Mechanical Durability	≥50	Cycles
Minimum Bend Radius, Single Bend	5 × Cable OD	
Minimum Bend Radius, Assembly / Repeated Bend	10 × Cable OD	

Pin-out Definition

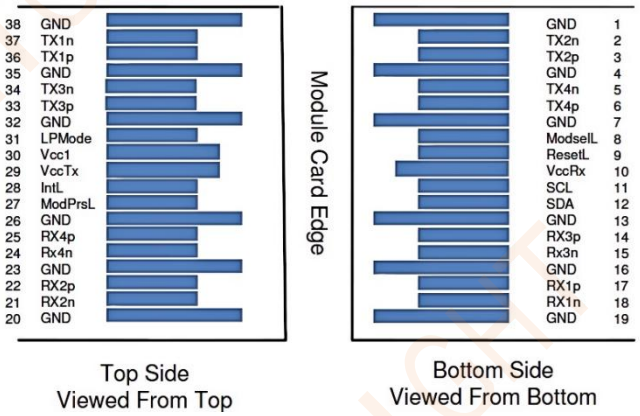

Figure4:Pin view

Pin Function Definitions

Pin	Logic	Symbol	Description	Note
1		GND	Ground	1
2	CML-I	Tx2n	Transmitter Inverted Data Input	3
3	CML-I	Tx2p	Transmitter Non-Inverted Data Input	3
4		GND	Ground	1
5	CML-I	Tx4n	Transmitter Inverted Data Input	3
6	CML-I	Tx4p	Transmitter Non-Inverted Data Input	3
7		GND	Ground	1
8	LVTTL-I	ModSelL	Module Select	4
9	LVTTL-I	ReSelL	Module Select	4
10		Vcc Rx	+3.3V Power Supply Receiver	2
11	LVCMOS-I/O	SCL	2-wire serial interface clock	4
12	LVCMOS-I/O	SDA	2-wire serial interface data	4
13		GND	Ground	1
14	CML-O	Rx3p	Receiver Non-Inverted Data Output	3
15	CML-O	Rx3n	Receiver Inverted Data Output	3
16		GND	Ground	1
17	CML-O	Rx1p	Receiver Non-Inverted Data Output	3
18	CML-O	Rx1n	Receiver Inverted Data Output	3
19		GND	Ground	1
20		GND	Ground	1
21	CML-O	Rx2n	Receiver Inverted Data Output	3
22	CML-O	Rx2p	Receiver Non-Inverted Data Output	3
23		GND	Ground	1
24	CML-O	Rx4n	Receiver Inverted Data Output	3
25	CML-O	Rx4p	Receiver Non-Inverted Data Output Ground	3
26		GND	Ground	1
27	LVTTL-O	ModPrsL	Module Present	4
28	LVTTL-O	IntL	Interrupt	4
29		Vcc Tx	+3.3V Power supply transmitter	2
30		Vcc1	+3.3V Power supply	2
31	LVTTL-I	LPMode	Low Power Mode	4
32		GND	Ground	1
33	CML-I	Tx3p	Transmitter Non-Inverted Data Input	3
34	CML-I	Tx3n	Transmitter Inverted Data Input	3
35		GND	Ground	1
36	CML-I	Tx1p	Transmitter Non-Inverted Data Input	3
37	CML-I	Tx1n	Transmitter Inverted Data Input	3
38		GND	Ground	1

Note1:GND is the symbol for signal and supply (power) common for the QSFP+ module. All are common within the QSFP+ module and all module voltages are referenced to this potential unless otherwise noted. Connect these directly to the host board

signal-common ground plane.

Note2: Vcc Rx, Vcc1 and Vcc Tx are the receiver and transmitter power supplies and shall be applied concurrently. Requirements defined for the host side of the Host Edge Card Connector are listed in Table. Recommended host board power supply filtering is shown in Host board power supply circuit. Vcc Rx Vcc1 and Vcc Tx may be internally connected within the QSFP module in any combination. The connector pins are each rated for a maximum current of 500 mA.

Note3: High-speed signal interfaces require differential pairs (e.g. TX1+/TX1-) with tightly matched impedances (typically 100Ω).

Note4: The management and control signals are based on LVTTL level logic and are used for functions such as module selection and reset.

Monitoring Specification

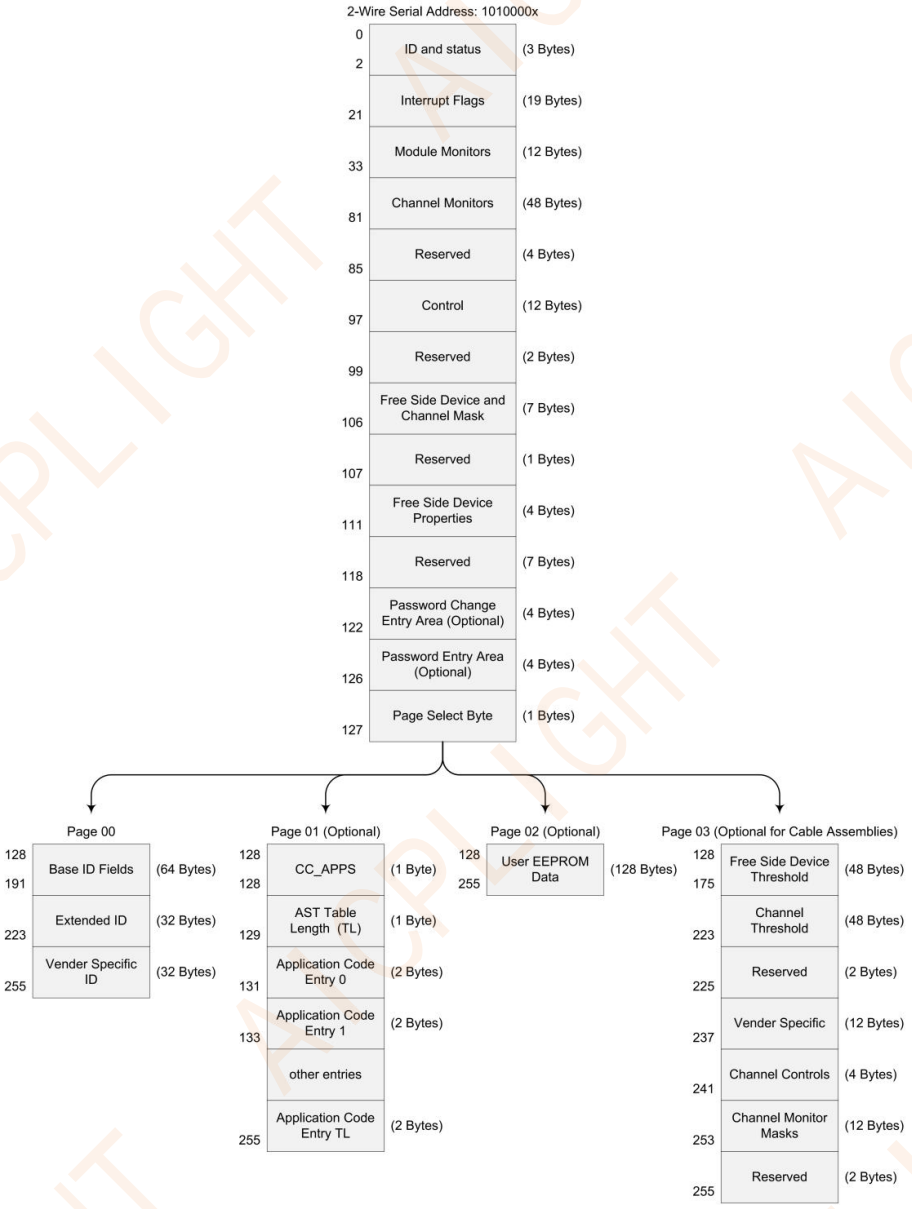

Figure5: Memory map

Memory map Table

Byte	Unit	Name	Description
			Lower Page 00h
0	1	Identifier	Type of transceiver,Page 00h Byte 0 and Page 00h Byte 128 shall contain the same parameter values.
1	1	Status	Revision Compliance
2	1	Status	Status indicators

3-21	19	Interrupt Flags	Consist of interrupt flags for LOS, Tx Fault, warnings and alarms. The non-asserted state shall be 0b.
22	1	Temperature MSB	Internally measured temperature (MSB)
23	1	Temperature LSB	Internally measured temperature (LSB)
24-25	2	Reserved	Reserved
26	1	Supply Voltage MSB	Internally measured supply voltage (MSB)
27	1	Supply Voltage LSB	Internally measured supply voltage (LSB)
28-29	2	Reserved	Reserved
30-33	4	Vendor Specific	Vendor Specific
34	1	Rx1 Power MSB	Internally measured Rx1 input power
35	1	Rx1 Power LSB	
36	1	Rx2 Power MSB	Internally measured Rx2 input power
37	1	Rx2 Power LSB	
38	1	Rx3 Power MSB	Internally measured Rx3 input power
39	1	Rx3 Power LSB	
40	1	Rx4 Power MSB	Internally measured Rx4 input power
41	1	Rx4 Power LSB	
42	1	Tx1 Bias MSB	Internally measured Tx1 bias
43	1	Tx1 Bias LSB	
44	1	Tx2 Bias MSB	Internally measured Tx2 bias
45	1	Tx2 Bias LSB	
46	1	Tx3 Bias MSB	Internally measured Tx3 bias
47	1	Tx3 Bias LSB	
48	1	Tx4 Bias MSB	Internally measured Tx4 bias
49	1	Tx4 Bias LSB	
50	1	Tx1 Power MSB	Internally measured Tx1 Power
51	1	Tx1 Power LSB	
52	1	Tx2 Power MSB	Internally measured Tx2 Power
53	1	Tx2 Power LSB	
54	1	Tx3 Power MSB	Internally measured Tx3 Power
55	1	Tx3 Power LSB	
56	1	Tx4 Power MSB	Internally measured Tx4 Power
57	1	Tx4 Power LSB	
58-65	8	Reserved	Reserved channel monitor set 4
66-73	8	Reserved	Reserved channel monitor set 5
74-81	8	Vendor Specific	Vendor Specific
82-85	4	Reserved	Reserved
86-99	14	Control	Control
100-106	7	Free Side Device and Channel Masks	Free Side Device and Channel Masks
107-110	4	Free Side Device Properties	Free Side Device Properties
111-112	2	Assigned for use by PCI	Used for:

		Express	- The PCI Express External Cable Specification
			- The PCI Express OCuLink Specification
113-117	4	Free Side Device Properties	Free Side Device Properties
118	1	Reserved	Reserved
119-122	4	Password Change Entry Area	Password Change Entry Area
123-126	4	Password Entry Area	Password Entry Area
127	1	Page Select Byte	Page Select Byte
Upper Page 00h			
128	1	Identifier	Identifier Type of free side device.(See SFF-8024 Transceiver Management)
129	1	Ext. Identifier	Extended Identifier of free side device. Includes power classes, CLEI codes, CDR capability.
130	1	Connector Type	Code for media connector type. (See SFF-8024 Transceiver Management)
131-138	8	Specification Compliance	Code for electronic or optical compatibility.
139	1	Encoding	Code for serial encoding algorithm. (See SFF-8024 Transceiver Management)
140	1	Signaling rate, nominal	Nominal signaling rate, units of 100 MBd. For rate > 25.4 GBd, set this to FFh and use Byte 222.
141	1	Extended Rate Select Compliance	Tags for extended rate select compliance.
142	1	Length (SMF)	Link length supported at the signaling rate in byte 140 or page 00h byte 222, for SMF fiber in km *. A value of 1 shall be used for reaches from 0 to 1 km.
143	1	Length (OM3 50 um)	Link length supported at the signaling rate in byte 140 or page 00h byte 222, for EBW 50/125 um fiber (OM3), units of 2 m *
144	1	Length (OM2 50 um)	Link length supported at the signaling rate in byte 140 or page 00h byte 222, for 50/125 um fiber (OM2), units of 1 m *
145	1	Length (OM1 62.5 um) or Copper Cable Attenuation	Link length supported at the signaling rate in byte 140 or page 00h byte 222, for 62.5/125 um fiber (OM1), units of 1 m *, or copper cable attenuation in dB at 25.78 GHz.
146	1	Length (passive copper or active cable or OM4 50 um)	Length of passive or active cable assembly (units of 1 m) or link length supported at the signaling rate in byte 140 or page 00h byte 222, for OM4 50/125 um fiber (units of 2 m) as indicated by Byte 147. See 6.3.12.
147	1	Device technology	Device technology
148-163	16	Vendor name	Free side device vendor name (ASCII)
164	1	Extended Module	Extended Module codes for InfiniBand.
165-167	3	Vendor OUI	Free side device vendor IEEE company ID.
168-183	16	Vendor PN	Part number provided by free side device vendor(ASCII)
184-185	2	Vendor rev	Revision level for part number provided by the vendor(ASCII)

186-187	2	Wavelength or Copper	Nominal laser wavelength (wavelength=value/20 in nm) or copper cable

		Cable Attenuation	attenuation in dB at 2.5 GHz (Byte 186) and 5.0 GHz (Byte 187)
188-189	2	Wavelength tolerance or Copper Cable Attenuation	The range of laser wavelength (+/- value) from nominal wavelength. (wavelength Tol. =value/200 in nm) or copper cable attenuation in dB at 7.0 GHz (Byte 188) and 12.9 GHz (Byte 189)
190	1	Max case temp	Maximum case temperature
191	1	CC_BASE	Check code for base ID fields (Bytes 128-190)
192	1	Link codes	Extended Specification Compliance Codes (See SFF-8024)
193-195	3	Options	Optional features implemented.
196-211	16	Vendor SN	Serial number provided by vendor.(ASCII)
212-219	8	Date Code	Vendor's manufacturing date code.
220	1	Diagnostic Monitoring Type	Indicates which type of diagnostic monitoring is implemented (if any) in the free side device. Bit 1,0 Reserved.
221	1	Enhanced Options	Indicates which optional enhanced features are implemented in the free side device.
222	1	CC_EXT	Check code for the Extended ID Fields (Bytes 192-222)
224-255	32	Vendor Specific	Vendor Specific EEPROM
Page 02h (Optional)			
128-255	128	User EEPROM Data	
Page 03h (Optional)			
128-129	2	Temp High Alarm	MSB at lower byte address
130-131	2	Temp Low Alarm	MSB at lower byte address
132-133	2	Temp High Warning	MSB at lower byte address
134-135	2	Temp Low Warning	MSB at lower byte address
136-143	8	Reserved	Reserved
144-145	2	Vcc High Alarm	MSB at lower byte address
146-147	2	Vcc Low Alarm	MSB at lower byte address
148-149	2	Vcc High Warning	MSB at lower byte address
150-151	2	Vcc Low Warning	MSB at lower byte address
152-159	8	Reserved	Reserved
160-175	16	Vendor Specific	Vendor Specific
176-177	2	Rx Power High Alarm	MSB at lower byte address
178-179	2	Rx Power Low Alarm	MSB at lower byte address
180-181	2	Rx Power High Warning	MSB at lower byte address
182-183	2	Rx Power Low Warning	MSB at lower byte address
184-185	2	Tx Bias High Alarm	MSB at lower byte address
186-187	2	Tx Bias Low Alarm	MSB at lower byte address
188-189	2	Tx Bias High Warning	MSB at lower byte address
190-191	2	Tx Bias Low Warning	MSB at lower byte address
192-193	2	Tx Power High Alarm	MSB at lower byte address
194-195	2	Tx Power Low Alarm	MSB at lower byte address
196-197	2	Tx Power High Warning	MSB at lower byte address
198-199	2	Tx Power Low Warning	MSB at lower byte address

200-207	8	Reserved	Reserved thresholds for channel parameter set 4
208-215	8	Reserved	Reserved thresholds for channel parameter set 5
216-223	8	Vendor Specific	Vendor Specific
224	1	Tx EQ & Rx Emphasis Magnitude ID	Tx EQ & Rx Emphasis Magnitude ID
225	1	Rx output amplitude support indicators	Rx output amplitude support indicators
226-229	4	Control options advertising	Control options advertising
230-241	12	Optional Channel Controls	Optional Channel Controls
242-247	6	Channel Monitor Masks	Channel Monitor Masks
248-249	2	Reserved	Reserved channel monitor masks set 4
250-251	2	Reserved	Reserved channel monitor masks set 5
252-255	4	Reserved	Reserved

Mechanical Dimension

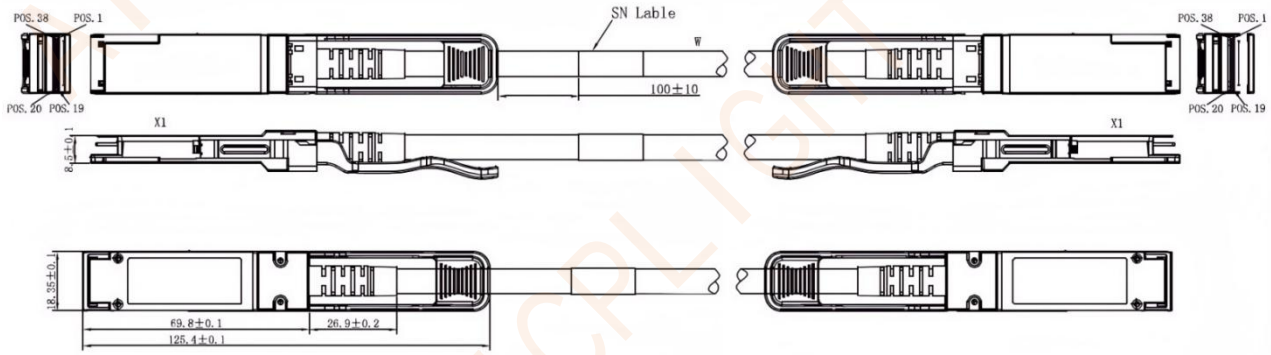

Note:

- All dimensions are in mm.
- Unless otherwise specified, dimensional tolerance is ±0.1 mm.
- Latch color: Black.
- Cable length tolerance: ±25 mm for L < 2 m and ±50 mm for L ≥ 2 m.

Handling and Safety Precautions:

- ESD Precautions: Follow standard ESD handling procedures when handling or installing the cable assembly, particularly at the connector ends.
- Bend Radius: Do not bend the cable below the specified minimum bend radius. Avoid sharp bends or repeated bending near the connector strain-relief area.
- Cable Handling: Avoid excessive pulling, twisting, crushing, kinking, or other mechanical stress that may damage the cable or affect signal integrity.
- Installation and Removal: Use the pull tab or release mechanism when inserting or removing the cable assembly. Do not pull directly on the cable.
- Connector Protection: Keep the electrical connector contacts clean and protected from dust, moisture, and contamination when not installed.

- Cable Assembly Protection: Do not disassemble, modify, splice, or attempt to repair the cable assembly or connector housing. Replace the cable if physical damage is observed.

Ordering Information

PN	Description
Q100-EDR-C0.5	100G QSFP28 to 100G QSFP28 InfiniBand EDR Passive Direct Attach Copper Twinax Cable,0.5m
Q100-EDR-C1	100G QSFP28 to 100G QSFP28 InfiniBand EDR Passive Direct Attach Copper Twinax Cable,1m
Q100-EDR-C1.5	100G QSFP28 to 100G QSFP28 InfiniBand EDR Passive Direct Attach Copper Twinax Cable,1.5m
Q100-EDR-C2	100G QSFP28 to 100G QSFP28 InfiniBand EDR Passive Direct Attach Copper Twinax Cable,2m
Q100-EDR-C3	100G QSFP28 to 100G QSFP28 InfiniBand EDR Passive Direct Attach Copper Twinax Cable,3m
Q100-EDR-C5	100G QSFP28 to 100G QSFP28 InfiniBand EDR Passive Direct Attach Copper Twinax Cable,5m