Product Specification

1000BASE-T SFP Copper RJ45 100m Transceiver Module

PN: SFP-1G-T

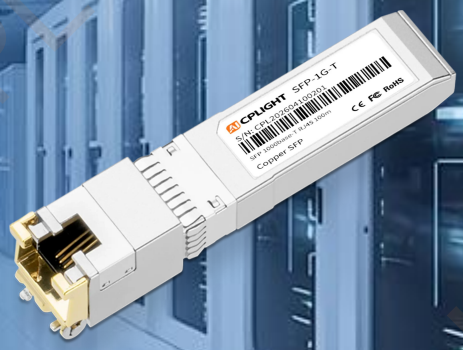

Features

- 1.25 Gb/s host-side SerDes signaling rate
- Single +3.3V power supply
- SFP form with compact RJ-45 connector
- 1000 BASE-T operation in host systems with SERDES interface
- Link lengths: up to 100 meter
- Detailed product information in EEPROM
- For 100m reach over cat 5 UTP cable
- Low power consumption
- Power consumption less than 1.2W
- Operating case temperature：0~+70°C

Compliance

- Compliant with SFP MSA
- Compliant with SFF-8472
- RoHS

Applications

- 1000BASE-T Gigabit Ethernet over Category 5 or better twisted-pair copper cabling

Description

The SFP-1G-T is a 1000BASE-T SFP copper transceiver module designed for data transmission over Category 5 or better unshielded twisted-pair (UTP) copper cabling. This compact, hot-swappable module features an RJ45 interface and supports Gigabit Ethernet connectivity with a maximum reach of 100 meters, making it ideal for enterprise networks, data centers, and telecom infrastructure.It enables 1000BASE-T copper connectivity for compatible SFP-equipped switches, routers, servers, and media converters. The module employs Pulse Amplitude Modulation (PAM-5) signaling to ensure reliable performance in full-duplex mode while maintaining low power consumption.

The SFP-1G-T is designed for 1000BASE-T operation through a host-side SerDes interface. Its SFP form factor allows high-density port deployment in space-constrained environments. The integrated 1000BASE-T PHY converts the host-side SerDes electrical interface to the RJ45 copper line interface.Product identification information is stored in the SFP EEPROM and is accessible through the two-wire serial interface.The module enables SFP-equipped Ethernet equipment to connect to 1000BASE-T copper links for short-reach network connections.

Product performance Specifications

1、Absolute Maximum Ratings

Parameter	Symbol	Min	Typ.	Max	Unit
Storage Temperature	T_S	-40	-	+85	°C
Operating Relative Humidity	RH	5	-	+85	%
Supply Voltage	V_{CC}	-0.5	-	+3.6	V
Link Distance				100	m

2、Recommended Operating Conditions

Parameter	Symbol	Min	Typ.	Max	Unit
Operating Case Temperature	T_C	0	25	70	°C
Supply Current	I_{CC}		300	350	mA
Power Supply Voltage	V_{CC}	3.135	3.3	3.465	V
Surge Current	Isurge			30	mA

3、Electrical Characteristics

Parameter	Symbol	Min	Typ.	Max	Unit
Differential Input Voltage	Vin p-p	500		2400	mV
Differential Output Voltage	Vout p-p	500		1200	mV

Data rate		10		1250	Mbps
Bit Error Rate	BER		10 -10		
Low-Speed Signals, Electronic Characteristics					
SFP Output LOW[1]	VOL	0		0.5	V
SFP Output HIGH[1]	VOH	host_V_{CC} - 0.5		host_V_{CC} + 0.3	V
SFP Input LOW[1]	VIL	0		0.8	V
SFP Input HIGH[1]	VIH	2		V_{CC} +0.3	V
High-Speed Electrical Interface, Transmission Line-SFP					
Line Frequency[2]	fL		125		MHz
Tx Outputimpedance[3]	Zout,TX		100		Ohm
Rx InputImpedance[3]	Zin,RX		100		Ohm
High-Speed Electrical Interface, Host-SFP					
Single ended data input swing	Vin	250		1200	mV
Single ended data output swing	Vout	350		800	mV
Rise/Fall Time	Tr,Tf		175		psec
Tx Input Impedance	Zin		50		Ohm
Rx Output Impedance	Zout		50		Ohm

Note1:4.7k to 10k pull-up to host_Vcc,measured at host side of connector

Note2:5-level encoding, per IEEE 802.3

Note3: Differential, for all frequencies between1MHz and 125MHz

Recommended Host Board Power Supply Circuit

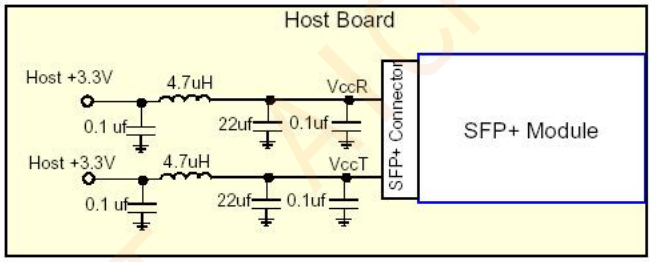

Figure 1:Recommended Host Board Power Supply Circuit

Recommended Interface Circuit

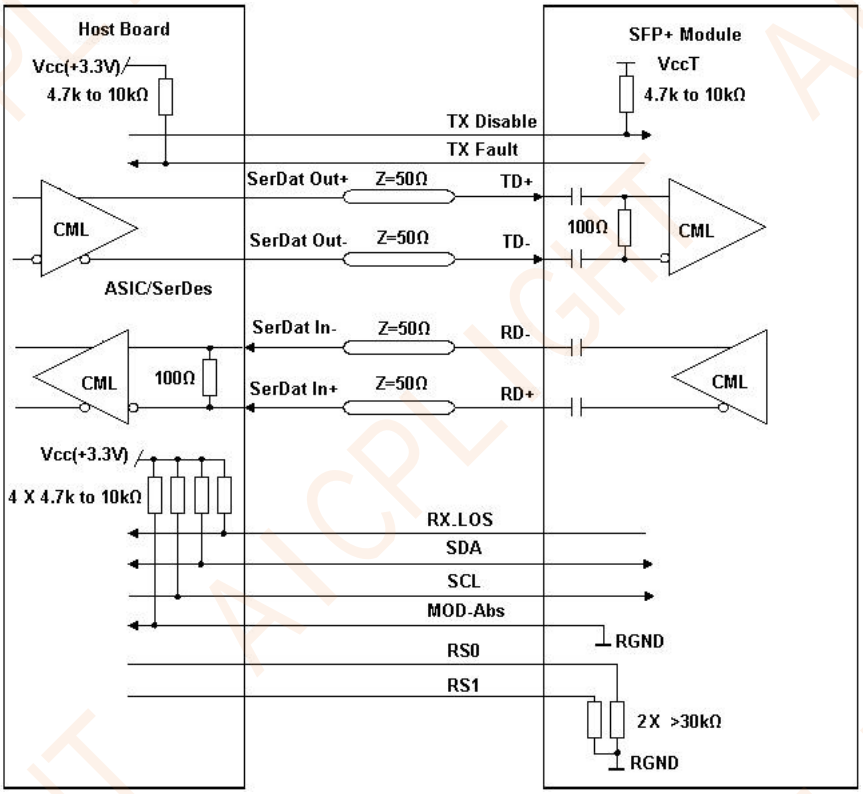

Figure2:Recommended Interface Circuit

Pin-out Definition

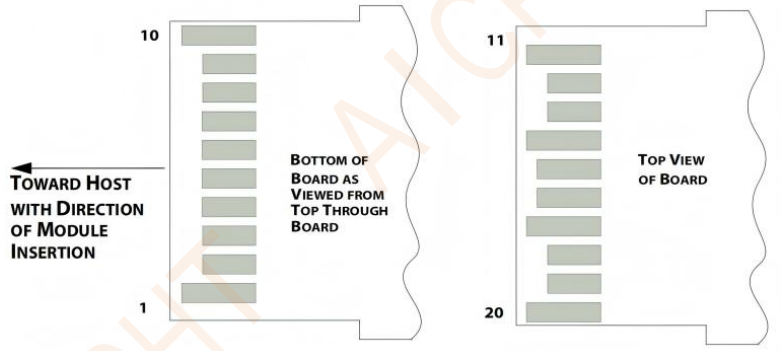

Figure3: Pin view

Pin Function Definitions

Pin	Logic	Symbol	Description	Note
1		VeeT	Module Transmitter Ground	1
2	LVTTL-O	TX_Fault	Module Transmitter Fault	2
3	LVTTL-I	TX_Disable	Transmitter Disable; Turns off transmitter laser output	3
4	LVTTL-I/O	SDA	2-wire Serial Interface Data Line (Same as MOD-DEF2 as defined in the INF-8074i)	4
5	LVTTL-I/O	SCL	2-wire Serial Interface Clock (Same as MOD-DEF1 as defined in the INF-8074i)	4
6		MOD_ABS	Module Absent, connected to VeeT or VeeR in the module	5
7	LVTTL-I	RS0	Adaptive multi-rate operation	6
8	LVTTL-O	RX_LOS	Receiver Loss of Signal Indication (In FC designated as RX_LOS, in SONET designated as LOS, and in Ethernet designated at Signal Detect)	2
9	LVTTL-I	RS1	Adaptive multi-rate operation	6
10		VeeR	Module Receiver Ground	1
11		VeeR	Module Receiver Ground	1
12	CML-O	RD-	Receiver Inverted Data Output	
13	CML-O	RD+	Receiver Non-Inverted Data Output	
14		VeeR	Module Receiver Ground	1
15		VccR	Module Receiver 3.3 V Supply	
16		VccT	Module Transmitter 3.3 V Supply	
17		VeeT	Module Transmitter Ground	1
18	CML-I	TD+	Transmitter Non-Inverted Data Input	
19	CML-I	TD-	Transmitter Inverted Data Input	
20		VeeT	Module Transmitter Ground	1

Note1: The module signal ground pins, VeeR and VeeT, shall be isolated from the module case.

Note2: Pin 8 – LOS: Not Used

Note3: This pin is an open collector/drain input pin and shall be pulled up with 4.7kΩ-10kΩ to VccT in the module.

Note4: See SFF-8431 4.2 2-wire Electrical Specifications.

Note5: This pin shall be pulled up with 4.7kΩ-10kΩ to Host_Vcc on the host board.

Note6: Connect with 30kΩ load pulled down to GND in the module.

Monitoring Specification

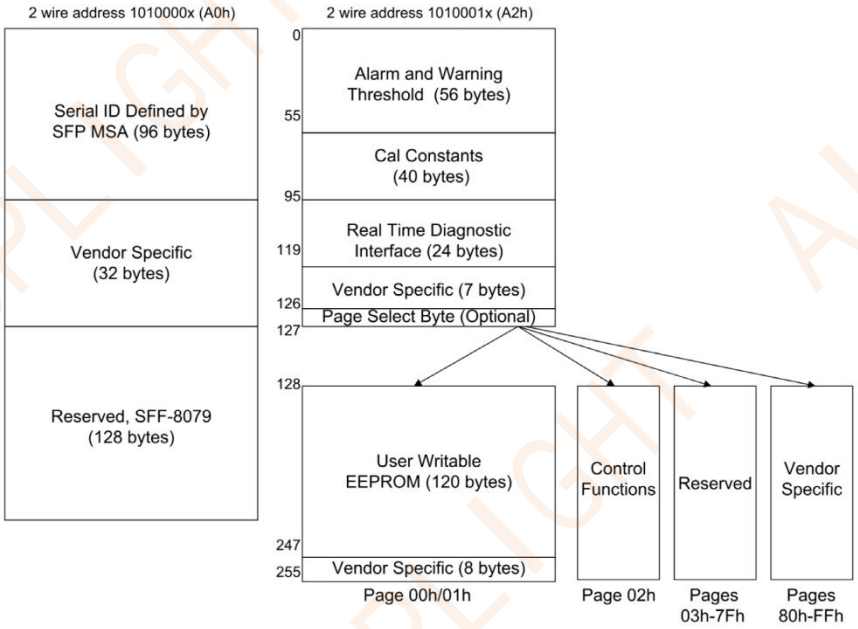

Figure4: Memory map

Memory map Table

A0h	Bytes	Name	Description
A0h ID Fields			
0	1	Identifier	Type of transceiver
1	1	Ext. Identifier	Extended identifier of type of transceiver
2	1	Connector	Code for connector type
3-10	8	Transceiver	Code for electronic or optical compatibility
11	1	Encoding	Code for high speed serial encoding algorithm
12	1	Signaling Rate, Nominal	Nominal signaling rate, units of 100 MBd.
13	1	Rate Identifier	Type of rate select functionality
14	1	Length (SMF,km) or Copper Cable Attenuation	Link length supported for single-mode fiber, units of km, or copper cable attenuation in dB at 12.9 GHz
15	**1**	**Length (SMF) or Copper Cable Attenuation**	**Link length supported for single-mode fiber, units of 100 m, or copper cable attenuation in dB at 25.78 GHz**

16	1	Length (50 um, OM2)	Link length supported for 50 um OM2 fiber, units of 10 m
17	1	Length (62.5 um, OM1)	Link length supported for 62.5 um OM1 fiber, units of 10 m
18	1	Length (OM4 or copper cable)	Link length supported for 50um OM4 fiber, units of 10 m. Alternatively, copper or direct attach cable, units of m
19	1	Length (OM3) or Cable length, additional	Link length supported for 50 um OM3 fiber, units of 10 m. Alternatively, copper or direct attach cable multiplier and base value
20-35	16	Vendor name	SFP vendor name (ASCII)
36	1	Transceiver	Code for electronic or optical compatibility
37-39	3	Vendor OUI	SFP vendor IEEE company ID
40-55	16	Vendor PN	Part number provided by SFP vendor (ASCII)
56-59	4	Vendor rev	Revision level for part number provided by vendor (ASCII)
60-61	2	Wavelength	Laser wavelength (Passive/Active Cable Specification Compliance)
62	1	Fibre Channel Speed 2	Transceiver's Fibre Channel speed capabilities
63	1	CC_BASE	Check code for Base ID Fields (addresses 0 to 62)
64-65	2	Options	Indicates which optional transceiver signals are implemented
66	1	Signaling Rate, max	Upper signaling rate margin, units of %
67	1	Signaling Rate, min	Lower signaling rate margin, units of %
68-83	16	Vendor SN	Serial number provided by vendor (ASCII)
84-91	8	Date code	Vendor's manufacturing date code
92	1	Diagnostic Monitoring Type	Indicates which type of diagnostic monitoring is implemented (if any) in the transceiver
93	1	Enhanced Options	Indicates which optional enhanced features are implemented (if any) in the transceiver
94	1	SFF-8472 Compliance	Indicates which revision of SFF-8472 the transceiver complies with.
95	1	CC_EXT	Check code for the Extended ID Fields (addresses 64 to 94)
96-127	32	Vendor Specific	Vendor Specific EEPROM
128-255	128	Reserved	Reserved (was assigned to SFF-8079)
A2h ID Fields			
00-01	2	Temp High Alarm	MSB at low address
02-03	2	Temp Low Alarm	MSB at low address
04-05	2	Temp High Warning	MSB at low address
06-07	2	Temp Low Warning	MSB at low address
08-09	2	Voltage High Alarm	MSB at low address
10-11	2	Voltage Low Alarm	MSB at low address
12-13	2	Voltage High Warning	MSB at low address
14-15	2	Voltage Low Warning	MSB at low address
16-17	2	Bias High Alarm	MSB at low address
18-19	2	Bias Low Alarm	MSB at low address
20-21	2	Bias High Warning	MSB at low address
22-23	2	Bias Low Warning	MSB at low address
24-25	**2**	**TX Power High Alarm**	**MSB at low address**
26-27	2	TX Power Low Alarm	MSB at low address

28-29	2	TX Power High Warning	MSB at low address
30-31	2	TX Power Low Warning	MSB at low address
32-33	2	RX Power High Alarm	MSB at low address
34-35	2	RX Power Low Alarm	MSB at low address
36-37	2	RX Power High Warning	MSB at low address
38-39	2	RX Power Low Warning	MSB at low address
40-41	2	Optional Laser Temp High Alarm	MSB at low address
42-43	2	Optional Laser Temp Low Alarm	MSB at low address
44-45	2	Optional Laser Temp High Warning	MSB at low address
46-47	2	Optional Laser Temp Low Warning	MSB at low address
48-49	2	Optional TEC Current High Alarm	MSB at low address
50-51	2	Optional TEC Current Low Alarm	MSB at low address
52-53	2	Optional TEC Current High Warning	MSB at low address
54-55	2	Optional TEC Current Low Warning	MSB at low address
56-91	36	Ext Cal Constants or Additional Enhanced Features	Diagnostic calibration constants for optional External Calibration if External Calibration bit, A0h, byte 92, bit 4 is 1 Additional Enhanced Features advertisement, control and status if External Calibration bit, A0h, byte 92, bit 4 is 0
92-94	3	Reserved	
95	1	CC_DMI	Check code for Base Diagnostic Fields (addresses 0 to 94)
96-105	10	Diagnostics	Diagnostic Monitor Data (internally or externally calibrated)
106-109	4	Optional Diagnostics	Monitor Data for Optional Laser temperature and TEC current
110	1	Status/Control	Optional Status and Control Bits
111	1	Reserved	Reserved (was assigned to SFF-8079)
112-113	2	Alarm Flags	Diagnostic Alarm Flag Status Bits
114	1	Tx Input EQ control	Tx Input equalization level control
115	1	Rx Out Emphasis control	Rx Output emphasis level control
116-117	2	Warning Flags	Diagnostic Warning Flag Status Bits
118-119	2	Ext Status/Control	Extended module control and status bytes
120-126	7	Vendor Specific	Vendor specific memory addresses
127	1	Table Select	Optional Page Select
A2h Page 00-01h			
128-247	120	User EEPROM	User writable non-volatile memory
248-255	8	Vendor Control	Vendor specific control addresses
A2h Page 02h			
128-129	2	Reserved	Reserved for SFF-8690 (Tunable Transmitter)
130	1	Reserved	Reserved for future receiver controls
131	1	Rx Decision Threshold	RDT value setting

132-172	**41**	**Reserved**	**Reserved for SFF-8690**
173-255	83	Reserved	Reserved

Mechanical Dimension

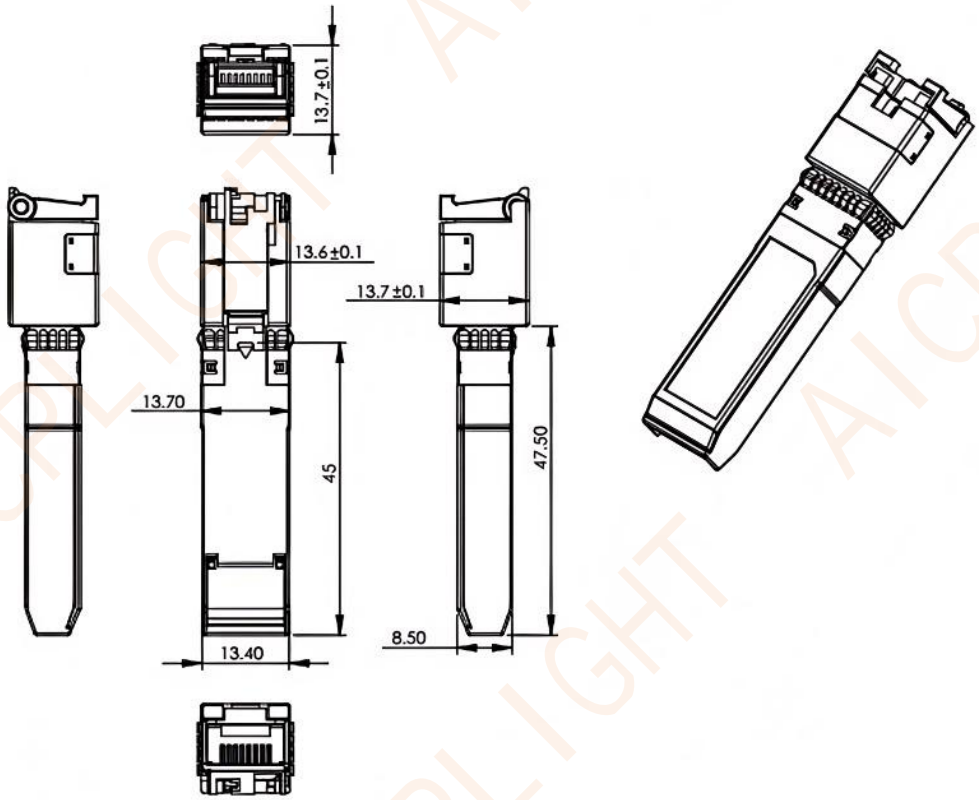

Handling and Safety Precautions:

- **ESD Precautions:** Follow standard electrostatic discharge (ESD) handling procedures when handling, installing, or removing the module. Use a grounded wrist strap or other appropriate ESD protection.
- **Hot-Plug Handling:** The module is hot-pluggable. Insert or remove it only by holding the module housing and using the latch or release mechanism as intended.
- **Connector Protection:** Keep the SFP electrical contacts and RJ45 connector clean and free from dust, moisture, oil, and other contaminants.
- **Mechanical Handling:** Do not drop, crush, bend, strike, or apply excessive mechanical force to the module or latch mechanism.
- **Installation and Removal:** Ensure the module is properly aligned with the SFP cage before insertion. Do not force the module into the port or pull it out without releasing the latch.
- **RJ45 Cable Handling:** Insert and remove the Ethernet cable by holding the RJ45 plug. Do not pull directly on the cable.
- **Operating Environment:** Do not operate the module outside the specified temperature, humidity, or supply-voltage limits.
- **Disassembly:** Do not disassemble, modify, or attempt to repair the module. Unauthorized disassembly may damage the internal circuitry and affect product performance.

Ordering Information

PN	Description
SFP-1G-T	1000BASE-T SFP Copper RJ45 100m Transceiver Module
SFP-1G-SX	1000BASE-SX SFP 1G 850nm 550m DOM Duplex LC/UPC MMF Optical Transceiver Module
SFP-1G-LX	1000BASE-LX SFP 1G 1310nm 10km DOM Duplex LC/UPC SMF Optical Transceiver Module